Fusion

GHSS 60"H Heated Self-Service Case

Structural Concepts®
DELIVERING FRESH. ALWAYS.™

- **GHSS460H** 51"L x 31-3/4"D x 59-5/8"H
- **GHSS460H-4** 51"L x 31-3/4"D x 59-5/8"H
- **GHSS660H** 75-3/8"L x 31-3/4"D x 59-5/8"H



GHSS660H

Included

- Heated deck and shelving
- LED top & shelf lights
- One year parts & labor warranty
- Stainless steel rear exterior

Specify	Standard Features	Additional Options
EXTERIOR COLOR	• Laminate (stock colors)	• Laminate (non-stock colors) • Powder coated (stock/non-stock colors) • Powder coated Silversan Black
INTERIOR COLOR	• Stainless steel	
LOWER FRONT PANEL COLOR	• Powder coated Silversan Black	• Powder coated (stock/non-stock colors) • Stainless steel
BASE SUPPORT	• Rail system for shims	• 6"H legs • Casters w/ levelers
BUMPER FRONT	• 1" Boston bumper (specify color)	• 1" Stainless steel plate rail bumper
END PANEL PROFILE	• Flat angled	• Curved
END PANELS	• Full w/stainless steel mirror interior	• Cutaway w/glass
PRICE TAG MOLDING	• None	• Acrylic product stops w/sign channel
REAR DOORS	• None (solid back panel)	• Reflective glass rear sliding doors
SHELVING	• Solid heated shelves, 3 levels	[1] • Solid heated shelves, 4 levels
LIGHTS	• LED 3500K w/ frosted lens	• LED 4000K w/ frosted lens
ELECTRICAL CONNECTION	• Electrical leads	• Three phase locking power cord

Option Notes: 1 - 4ft only, see -4 tech for load reqmts

Fusion

GHSS 60"H Heated Self-Service Case

Structural Concepts®
DELIVERING FRESH. ALWAYS.™

Intended Environment:	Type I - Designed to operate in ambient conditions of 75°F with 55% relative humidity unless noted otherwise in system information below.	
Zone	**Intended Product To Be Displayed**	**Warmest Avg Prod Temp ° F**
1	Packaged heated product	160

PLAN VIEW

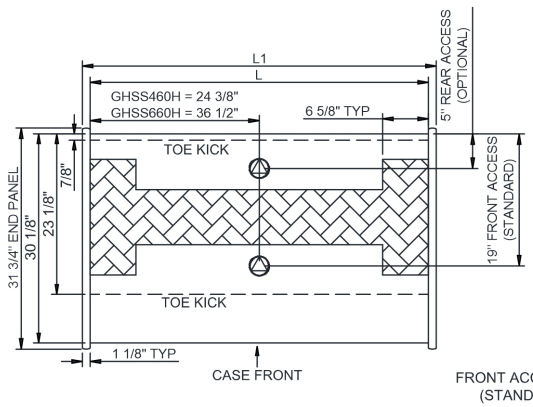

SIDE VIEW

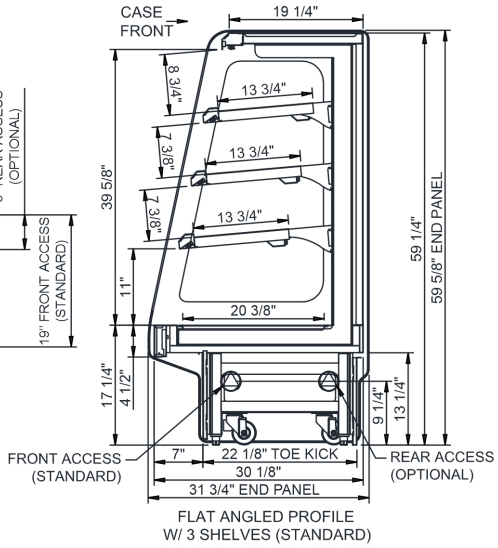

FLAT ANGLED PROFILE
W/ 3 SHELVES (STANDARD)

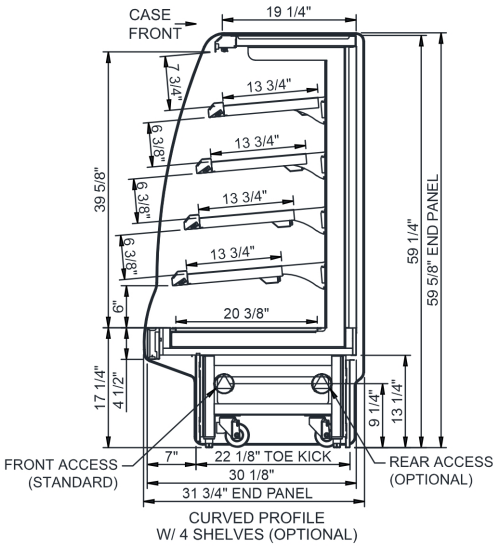

CURVED PROFILE
W/ 4 SHELVES (OPTIONAL)

NOTE: ALL DIMENSIONS APPROXIMATE

ELECTRICAL JUNCTION BOX (SUPPLIED WITH 6" LEADS OR POWER CORD).
LOCATION OF DRAIN TUBE FOR REMOTE REF. ONLY (SUPPLIED WITH ¾" OR 1½" PVC TUBE).
REFRIGERATION LINE CONNECTION.
REMOTE FLOOR SINK & UTILITIES ACCESS AREA.
SELF-CONTAINED CASE SERVICE ACCESS AREA.
DRY CASE SERVICE ACCESS AREA.

Model Technical Specifications

Model	L"	L1"	L2"	System Circuit Volts			Phs	Freq	Amps ***	Watts	Wires	NEMA Plug	SST	Conv. Rack BTUH	Para. Rack BTUH	Est Wt
GHSS460H	48.75	51.00	.00	Heat (N/A)	Circuit #1	208	1	50-60	22.29	4,655	2+G	Leads Single	N/A	N/A	N/A	800
						240	1	50-60	25.65	6,166	2+G	Leads Single	N/A	N/A	N/A	
						208	3	50-60	17.13	4,655	3+G	Leads Single	N/A	N/A	N/A	
						240	3	50-60	19.70	6,166	3+G	Leads Single	N/A	N/A	N/A	
GHSS460H-4	48.75	51.00	.00	Heat (N/A)	Circuit #1	208	1	50-60	27.45	5,752	2+G	Leads Single	N/A	N/A	N/A	N/A
						240	1	50-60	31.60	7,618	2+G	Leads Single	N/A	N/A	N/A	
						208	3	50-60	27.45	5,752	3+G	Leads Single	N/A	N/A	N/A	
						240	3	50-60	31.60	7,618	3+G	Leads Single	N/A	N/A	N/A	
GHSS660H	73.13	75.38	.00	Heat (N/A)	Circuit #1	208	1	50-60	32.06	6,589	2+G	Leads Single	N/A	N/A	N/A	1,100
						240	1	50-60	36.78	8,721	2+G	Leads Single	N/A	N/A	N/A	
						208	3	50-60	27.38	6,589	3+G	Leads Single	N/A	N/A	N/A	
						240	3	50-60	31.56	8,721	3+G	Leads Single	N/A	N/A	N/A	

*** Does not include electric defrost on freezer models.

Regulatory Approvals:	
All Models	ETL Listed to UL 197 ETL Listed to CAN/CSA 22.2 No. 109 UL Sanitation to NSF Std 4

DOE 2017 Energy Efficiency Compliant

Important Notes:

1) ELECTRICAL NOTE: If GFCI is required, a GFCI breaker MUST be used in lieu of a GFCI receptacle
2) 34" minimum door entry clearance required (without shipping skid).
3) The additional shelf option significantly increases electrical load for model. Refer to the -4 suffix model for these specifications.

⚠ **WARNING:** This product can expose you to chemicals, including Urethane (Ethyl Carbamate), which are known to the State of California to cause cancer and birth defects or other reproductive harm. For more information go to www.P65Warnings.ca.gov.

Placement of Case

Consider where the display case will be positioned relative to walls, ceilings, HVAC vents, windows, and other equipment discharging warm air.

The 5′ - 10′ - 15′ Rule

Stay 5′ away from an exterior window

Direct sunlight increases the heat load on the front of the display resulting in the refrigeration system having to work harder and possible condensation on the case.

Remain 10′ away from HVAC ceiling vents

Air blowing on the front of the display interrupts the air curtain and causes product temperatures to increase.

Minimum 4″ clearance to walls & ceilings.
Refer to spec sheets & design guide for further information.

With service display cases that have a glass front, air blowing on the front glass causes condensation to develop.

Position the display 15′ away from exterior doors

Air drafts from the front exterior doors interrupt the air curtain, allowing warm air to penetrate the inside of the display, affecting product temperature.

