BLODGETT®

MARK V-200

Full-Size Bakery Depth Electric Convection Oven



Shown with optional casters

Project _____

Item No. _____

Quantity _____

MARK V-200

Extra depth baking compartment- accepts five 18" x 26" standard full-size baking pans in left-to-right or front-to-back positions.
All data is shown per oven section, unless otherwise indicated.

Refer to operator manual specification chart for listed model names.

EXTERIOR CONSTRUCTION

- Full angle-iron frame
- Stainless steel front, top and sides
- Dual pane thermal glass windows sealed in stainless steel door frames
- Ergonomically friendly, curved aluminum door handle with simultaneous door operation
- Triple-mounted pressure lock door design with turnbuckle assembly
- Modular slide out front control panel for easy access
- Solid mineral fiber insulation at top, back, sides and bottom

INTERIOR CONSTRUCTION

- Double-sided porcelainized baking compartment liner (14 gauge)
- Aluminized blower wheel
- Five chrome-plated racks, eleven rack positions with a minimum of 1-5/8" (41mm) spacing
- Interior lights

OPERATION

- Three tubular heaters
- Solid state thermostat with temperature control range of 200°F (93°C) to 500°F (260°C)
- Two speed fan motor
- 1/2 horsepower blower motor with automatic thermal overload protection
- Control area cooling fan
- Two halogen oven lamps

STANDARD FEATURES

- Artisan Touchscreen Control with meat probe allows for Manual Cooking, Recipe Cooking, Cook and Hold, Core Probe Cooking, Fan Delay, and Fan Pulse.
- 25" (635mm) adjustable stainless steel legs (for single units)
- 6" (152mm) adjustable stainless steel legs (for double sections)
- Three year parts and two year labor warranty
- Five year limited oven door warranty*

** For all international markets, contact your local distributor.*

NOTE: The company reserves the right to make substitutions of components without prior notice

OPTIONS AND ACCESSORIES

(AT ADDITIONAL CHARGE)

- **Control options**
  - ❑ SSI-M - Solid state infinite control w/manual timer
  - ❑ SimpleTouch - NEW touchscreen control with ability to store and group recipes. Includes rack timing, Cook&Hold, Fan Delay, Fan Pulse, and HAACP storage capability
- **Legs, casters & stands**
  - ❑ 6" (152mm) seismic legs
  - ❑ 6" (152mm) casters
  - ❑ 4-1/4" (108mm) low profile casters (double only)
  - ❑ 25" (635mm) stainless steel stand w/rack guides
  - ❑ 29" (737mm) stainless steel, fully welded, open stand with pan supports
- ❑ VLF ventless hood
- ❑ Stainless steel oven liner
- ❑ Extra oven racks
- ❑ Solid stainless steel back
- ❑ 480 volt, 3 phase
- ❑ Prison package (includes security control panel and stainless steel back)
- ❑ Vent connector

OPTIONS AND ACCESSORIES

(AT NO ADDITIONAL CHARGE)

- ❑ Solid stainless steel doors

www.blodgett.com
42 Allen Martin Drive, Essex Junction, VT 05452
Phone: (802) 658-6600 | Fax: (802) 864-0183

P/N 57945 Rev J (11/26)

BLODGETT

MARK V-200

APPROVAL/STAMP

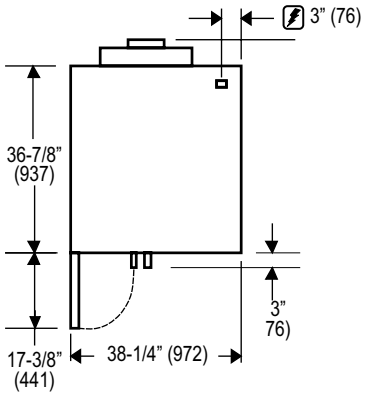

TOP VIEW

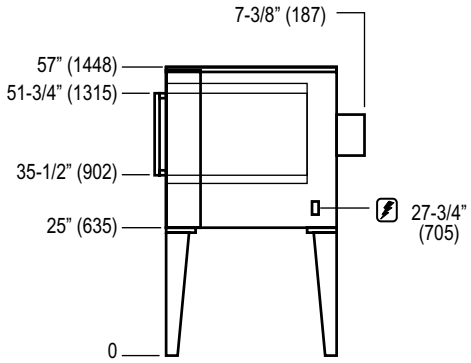

SINGLE

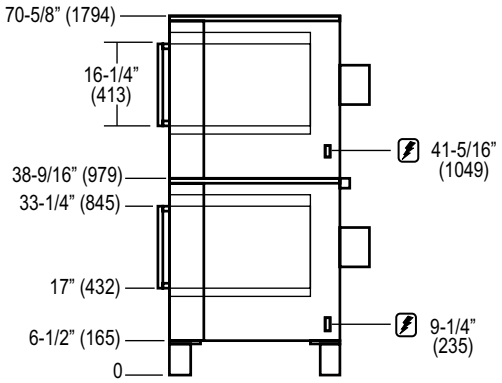

DOUBLE

Dimensions are in inches (mm)

SHORT FORM SPECIFICATIONS Provide Blodgett full-size, bakery depth convection oven model MARK V-200, (single/double) compartment. Each compartment shall have 14 gauge steel liner and shall accept five 18" x 26" standard full-size bake pans in left-to-right or front-to-back positions. Stainless steel front, top and sides. Doors shall be (solid stainless steel/dual pane thermal glass windows) with single curved aluminum door handle and simultaneous operation. Unit shall be gas heated with electronic spark ignition and shall cook by means of a direct fired system with a gas shutoff switch on the front of the control panel. Air in baking chamber distributed by single inlet blower wheel powered by a two-speed, 1/2 HP motor with thermal overload protection. Each chamber shall be fitted with two halogen lamps, and five chrome-plated removable racks. Control panel shall be recessed with Artisan Touchscreen Control allowing manual and recipe cooking, cook and hold, probe cooking, fan delay, and fan pulse. Provide three years parts, two year labor and five year door warranty. Provide options and accessories as indicated.

DIMENSIONS

Floor space	38-1/4" (972mm) W x 36-7/8" (936mm) L
Interior	29" (737mm) W x 20" (508mm) H x 28-1/4" (718mm) D
If oven is on casters	
Single	Add 4-1/2" (114mm) to height
Double	Height dimensions remain the same
Double Low Profile	Subtract 2.5" (64mm) from all height dimensions

PRODUCT CLEARANCE

From combustible and non-combustible construction

1/2" (13 mm)

Optional Heat Shield provides 1.25" Air Gap

MINIMUM ENTRY CLEARANCE

Uncrated	32-1/16" (814mm)
Crated	37-1/2" (953mm)

SHIPPING INFORMATION

Approx. Weight

Single	545 lbs. (247 kg)
Double	1060 lbs. (481 kg)

Crate Size

37-1/2" (952mm) x 43-1/2" (1105mm) x 51-3/4" (1315mm)
(2 crates required for double)

MAXIMUM INPUT

11 per oven section

POWER SUPPLY

VAC	Hz	Phase	kW	Amps (L1-L2-L3)
208	60	1	11	51/0/51
208	60	3	11	31/29/29
220/240	60	1	11	44/0/44
220/240	60	3	11	26/24/24
440	60	3	11	15/14/14
480	60	3	11	14/13/13

1/2 H.P., 2 speed motor, 1120 and 1710 RPM (60Hz.)

50 Hz. ovens for 400/230, 380Y/220 VAC or 415Y/240 VAC (4 wire) 3 phase are available)