Reveal®

Heated Self-Service Slide In Counter Case

Structural Concepts®
DELIVERING FRESH. ALWAYS.™

- **NE3613HSSV** 35-3/4"L x 33"D x 13-5/8"H
- **NE4813HSSV** 47-3/4"L x 33"D x 13-5/8"H



NE4813HSSV

Included

- NOTE: Glass warranty only applicable to first point of delivery
- Convection heat
- Glass end
- LED top light
- NOTE: Overall case height is 32-7/8" (includes below counter)
- One year parts & labor warranty
- Stainless steel interior
- UV bonded frameless glass

Specify	Standard Features	Additional Options
FRAME EXTERIOR COLOR	• Powder coated Silversan Black	• Powder coated (stock/non-stock colors) • Stainless steel
BASE SUPPORT	• Adjustable, locking casters	• 6"H legs
REAR DOORS	• None (solid back panel)	• Clear glass rear sliding doors • Reflective glass rear sliding doors
LIGHTS	• LED 3500K w/ frosted lens	• LED 3000K w/ frosted lens • LED 4000K w/ frosted lens
ELECTRICAL CONNECTION	• 10' Straight blade power cord	• 10' Locking blade power cord • Electrical leads (non-refrigerated)
MISCELLANEOUS		• Remoted control (allows controls to be up to 8' from center of case) • Second year parts & labor warranty

Reveal®

Heated Self-Service Slide In Counter Case

Structural Concepts®
DELIVERING FRESH. ALWAYS.™

Intended Environment:	Type I - Designed to operate in ambient conditions of 75°F with 55% relative humidity unless noted otherwise in system information below.	
Zone	**Intended Product To Be Displayed**	**Warmest Avg Prod Temp ° F**
1	Packaged / unpackaged heated products-Preheated to Warmest Avg Prod Temp.	160

PLAN VIEW

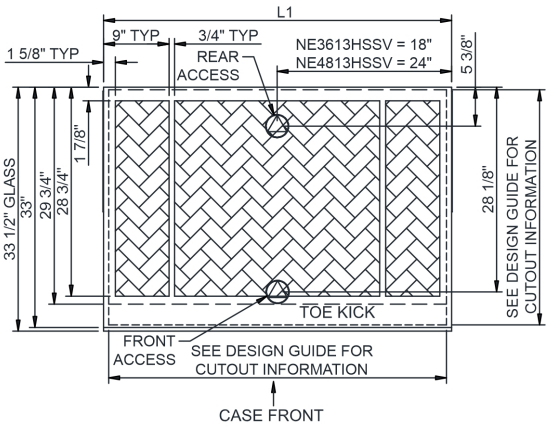

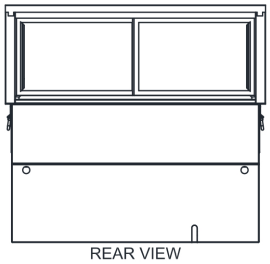

SIDE VIEW

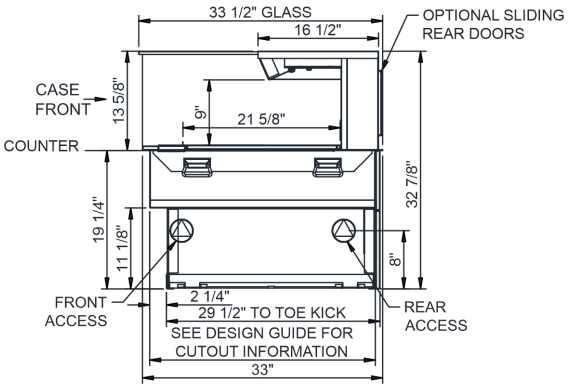

NOTE: ALL DIMENSIONS APPROXIMATE

ELECTRICAL JUNCTION BOX (SUPPLIED WITH 6" LEADS OR POWER CORD).
LOCATION OF DRAIN TUBE FOR REMOTE REF. ONLY (SUPPLIED WITH 3/4" OR 1 1/2" PVC TUBE).
REFRIGERATION LINE CONNECTION.
REMOTE FLOOR SINK & UTILITIES ACCESS AREA.
SELF-CONTAINED CASE SERVICE ACCESS AREA.
DRY CASE SERVICE ACCESS AREA.

Model Technical Specifications

Model	L"	L1"	L2"	System Circuit Volts			Phs	Freq	Amps ***	Watts	Wires	NEMA Plug	SST	Conv. Rack BTUH	Para. Rack BTUH	Est Wt
NE3613HSSV	N/A	35.75	.00	Heat (N/A)	Circuit #1	208-240	1	60	12.24	2,389	2+G	6-20P or L6-20P	N/A	N/A	N/A	650
NE4813HSSV	N/A	47.75	.00	Heat (N/A)	Circuit #1	208-240	1	60	18.14	3,569	2+G	6-30P or L6-30P	N/A	N/A	N/A	1,000

*** Does not include electric defrost on freezer models.

Regulatory Approvals:	
All Models	ETL Listed to UL 197 ETL Listed to CAN/CSA 22.2 No. 109 ETL Sanitation to NSF/ANSI 4

DOE 2017 Energy Efficiency Compliant

Important Notes:

1) ELECTRICAL NOTE: If GFCI is required, a GFCI breaker MUST be used in lieu of a GFCI receptacle.
2) 19.25" minimum space required beneath counter surface.
3) Glass warranty only applicable to first point of delivery.

⚠ **WARNING:** This product can expose you to chemicals, including Urethane (Ethyl Carbamate), which are known to the State of California to cause cancer and birth defects or other reproductive harm. For more information go to www.P65Warnings.ca.gov.

Placement of Case

Consider where the display case will be positioned relative to walls, ceilings, HVAC vents, windows, and other equipment discharging warm air.

The 5′ - 10′ - 15′ Rule

Stay 5′ away from an exterior window

Direct sunlight increases the heat load on the front of the display resulting in the refrigeration system having to work harder and possible condensation on the case.

Remain 10′ away from HVAC ceiling vents

Air blowing on the front of the display interrupts the air curtain and causes product temperatures to increase.

Minimum 4″ clearance to walls & ceilings.
Refer to spec sheets & design guide for further information.

With service display cases that have a glass front, air blowing on the front glass causes condensation to develop.

Position the display 15′ away from exterior doors

Air drafts from the front exterior doors interrupt the air curtain, allowing warm air to penetrate the inside of the display, affecting product temperature.

