Under Counter Design Dishtables

Left Side Model

DT48U-L
DT60U-L

Right Side Model

DT48U-R
DT60U-R

- Polished stainless steel work surface
- Fit most standard undercounter dishwashers
- Left or right operation
- Stainless steel cross braced legs
- 16 Ga. 304 S/S top & bowls
- 11-1/2 back-splash, 20 x 20 x 8 bowl
- Faucet and scrap basket are not included

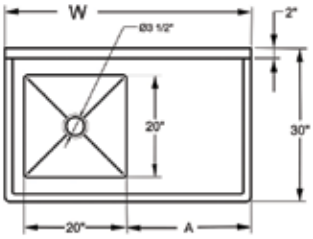

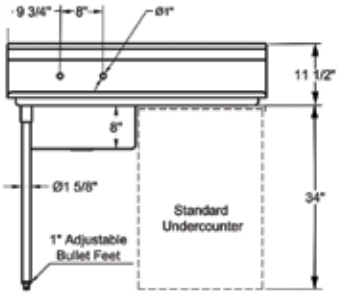

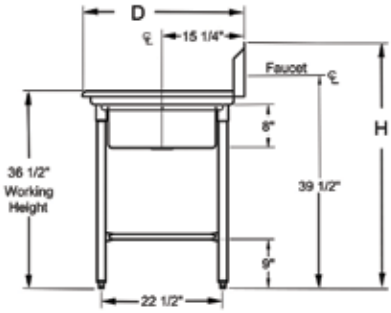

Item No.	D x W x H (in)	A (in)	G. W. (lb)
DT48U-L	30 x 48 x 34	24-1/4	50
DT48U-R	30 x 48 x 34	24-1/4	50
DT60U-L	30 x 60 x 34	36-1/4	57
DT60U-R	30 x 60 x 34	36-1/4	57

Dishtable Accessories

DT-WS2442
(Basket not included)

DT-WS2422

DT-SS Series

DT-SD

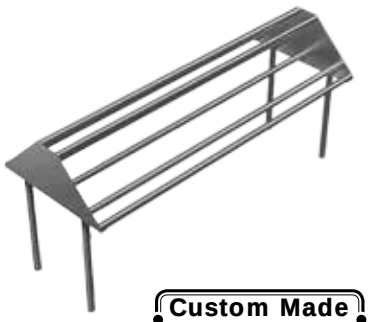

Custom Made Sizes Available

SD-2020

SD-2020B

DT-RS

Item No.	Description	G. W. (lb)	Qty. /case
DT-RS	Rack Slide For 20” x 20” Sink Bowl	28	10
DT-SD	Tubular Rack (Custom)	-	1
DT-SS Series	See Page 52 For More Options	-	1
DT-WS2422	Wall Mount Shelf For Glass Rack 22” x 24” x 17-1/2”	15	1
DT-WS2442	Wall Mount Shelf For Glass Rack 42” x 24” x 17-1/2”	24	1
SD-2020	Scrap Basket	8	1
SD-2020B	Scrap Basket With Pack Slide	16	1