Fusion

GMSV 52"H Heated Service Case

Structural Concepts®
DELIVERING FRESH. ALWAYS.™

- **GMSV4H** 51"L x 43"D x 51-5/8"H
- **GMSV6H** 75-3/8"L x 43"D x 51-5/8"H
- **GMSV8H** 99-3/4"L x 43"D x 51-5/8"H



GMSV6H

Included

- One year parts & labor warranty
- Stainless steel rear exterior
- Vertical swing out front glass

Specify	Standard Features	Additional Options
EXTERIOR COLOR	• Laminate (stock colors)	• Laminate (non-stock colors) • Powder coated (stock/non-stock colors) • Powder coated Silversan Black • Stainless steel
INTERIOR COLOR	• Stainless steel	
LOWER FRONT PANEL COLOR	• Powder coated Silversan Black	• Powder coated (stock/non-stock colors) • Stainless steel
BASE SUPPORT	• Rail system for shims	
BUMPER FRONT	• 1" Boston bumper (specify color)	• 1" Stainless steel plate rail bumper
DISPLAY	• 4"D Full pan with rear 1/3rd pan	
END PANELS	• Full w/stainless steel mirror interior	• Cutaway w/glass
SCALE STAND	• None	[1] • Scale stand w/ receptacle & CAT5 (specify location) • Scale stand w/ receptacle (specify location)
REAR DOORS	• Clear glass rear sliding doors	• Reflective glass rear sliding doors
ELECTRICAL CONNECTION	• Electrical leads (remote)	
MISCELLANEOUS		• Front glass lock • Rear door lock
ACCESSORIES		• Rear wrapping board, white Sanalite®

Option Notes: 1 - Separate circuit required

Fusion

GMSV 52"H Heated Service Case

Structural Concepts®
DELIVERING FRESH. ALWAYS.™

Intended Environment:	Type I - Designed to operate in ambient conditions of 75°F with 55% relative humidity unless noted otherwise in system information below.	
Zone	**Intended Product To Be Displayed**	**Warmest Avg Prod Temp ° F**
1	Unpackaged heated product	160

PLAN VIEW

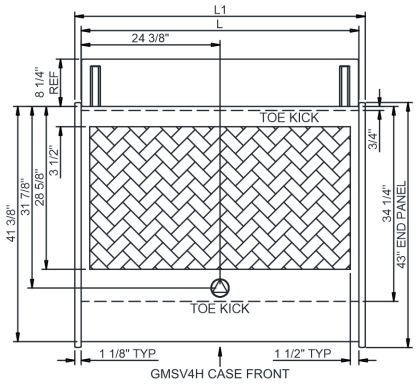

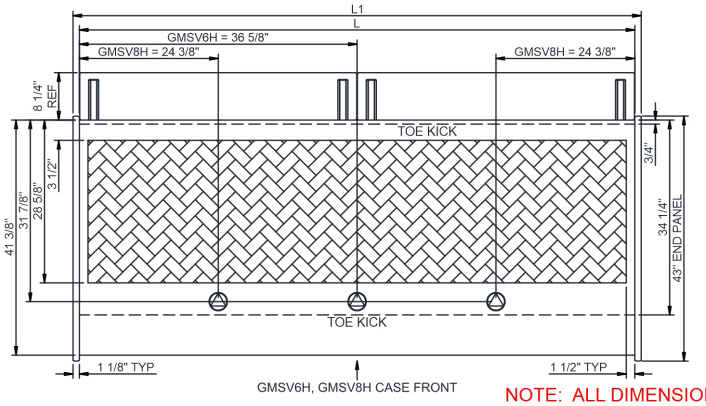

SIDE VIEW

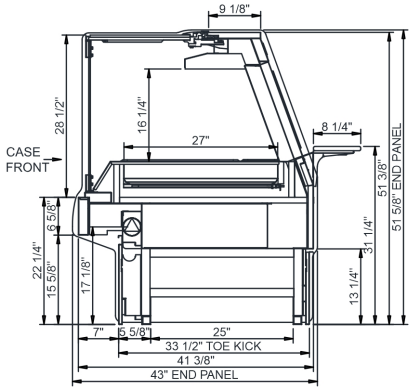

NOTE: ALL DIMENSIONS APPROXIMATE

ELECTRICAL JUNCTION BOX (SUPPLIED WITH 6" LEADS OR POWER CORD).
LOCATION OF DRAIN TUBE FOR REMOTE REF. ONLY (SUPPLIED WITH 3/4" OR 1 1/2" PVC TUBE).
REFRIGERATION LINE CONNECTION.
REMOTE FLOOR SINK & UTILITIES ACCESS AREA.
SELF-CONTAINED CASE SERVICE ACCESS AREA.
DRY CASE SERVICE ACCESS AREA.

Model Technical Specifications

Model	L"	L1"	L2"	System Circuit Volts			Phs	Freq	Amps ***	Watts	Wires	NEMA Plug	SST	Conv. Rack BTUH	Para. Rack BTUH	Est Wt
GMSV4H	48.75	51.00	.00	Heat (N/A)	Circuit #1	208	1	50-60	11.83	2,491	2+G	Leads Single	N/A	N/A	N/A	750
						240	1	50-60	13.60	3,289	2+G	Leads Single	N/A	N/A	N/A	
						208	3	50-60	7.97	2,491	3+G	Leads Single	N/A	N/A	N/A	
						240	3	50-60	9.15	3,289	3+G	Leads Single	N/A	N/A	N/A	
GMSV6H	73.13	75.38	.00	Heat (N/A)	Circuit #1	208	1	50-60	19.65	4,162	2+G	Leads Single	N/A	N/A	N/A	1,175
						240	1	50-60	22.60	5,493	2+G	Leads Single	N/A	N/A	N/A	
						208	3	50-60	15.44	4,162	3+G	Leads Single	N/A	N/A	N/A	
						240	3	50-60	17.80	5,493	3+G	Leads Single	N/A	N/A	N/A	
GMSV8H	97.50	99.75	.00	Heat (N/A)	Circuit #1	208	1	50-60	27.42	5,881	2+G	Leads Single	N/A	N/A	N/A	1,400
						240	1	50-60	31.55	7,745	2+G	Leads Single	N/A	N/A	N/A	
						208	3	50-60	27.42	5,881	3+G	Leads Single	N/A	N/A	N/A	
						240	3	50-60	31.55	7,745	3+G	Leads Single	N/A	N/A	N/A	

*** Does not include electric defrost on freezer models.

Regulatory Approvals:	
All Models	ETL Listed to UL 197 ETL Listed to CAN/CSA 22.2 No. 109 UL Sanitation to NSF Std 4

DOE 2017 Energy Efficiency Compliant

Important Notes:

1) ELECTRICAL NOTE: If GFCI is required, a GFCI breaker MUST be used in lieu of a GFCI receptacle.
2) 45" minimum door entry clearance required (without shipping skid).
3) Units must be shimmed during installation to ensure the unit is level and plumb.
4) Designed for dry heat.
5) Each well accommodates up to 4"D pans (not provided).

⚠ **WARNING:** This product can expose you to chemicals, including Urethane (Ethyl Carbamate), which are known to the State of California to cause cancer and birth defects or other reproductive harm. For more information go to www.P65Warnings.ca.gov.

Placement of Case

Consider where the display case will be positioned relative to walls, ceilings, HVAC vents, windows, and other equipment discharging warm air.

The 5′ - 10′ - 15′ Rule

Stay 5′ away from an exterior window

Direct sunlight increases the heat load on the front of the display resulting in the refrigeration system having to work harder and possible condensation on the case.

Remain 10′ away from HVAC ceiling vents

Air blowing on the front of the display interrupts the air curtain and causes product temperatures to increase.

Minimum 4″ clearance to walls & ceilings.
Refer to spec sheets & design guide for further information.

With service display cases that have a glass front, air blowing on the front glass causes condensation to develop.

Position the display 15′ away from exterior doors

Air drafts from the front exterior doors interrupt the air curtain, allowing warm air to penetrate the inside of the display, affecting product temperature.

