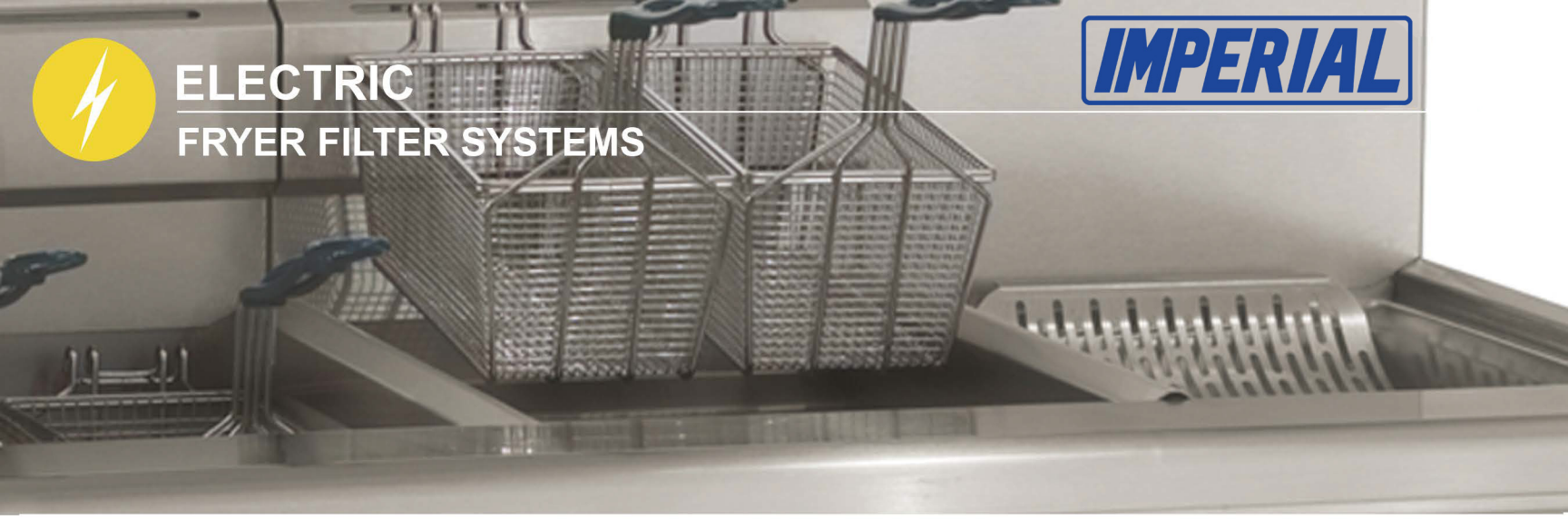

ELECTRIC
FRYER FILTER SYSTEMS

IMPERIAL

IFSCB250EU
Filter system with
drain station

Model Number
IFSCB150E IFSCB150EU
IFSCB250E IFSCB250EU
IFSCB350E IFSCB350EU
IFSCB450E IFSCB450EU
IFSCB550E IFSCB550EU
IFSCB650E IFSCB650EU

Add suffix "T" for Electronic Thermostat
Add suffix "C" for Computer Controls
Suffix "E" denotes Immersed Elements
Suffix "EU" denotes Tilt-up Elements

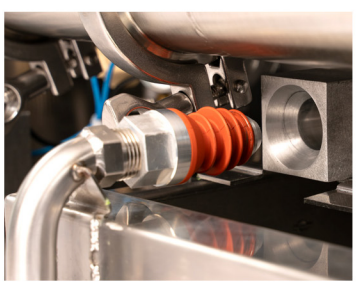

With Hands-free Filter Connection System

FILTER PACKAGE CHOICES
- Up to six fryers can be batteried into one fryer / filter system.
- Available for 50 and 75 lb. (27 and 41 Liters) oil capacity fryers.
- Available with Snap Action Thermostats, Electronic Thermostats or Computer Controls

DRAIN STATION
- Includes a matching stainless steel cabinet with a food warmer and dump pan.
- Cabinet may be located anywhere within the fryer battery.
- Cabinet is a convenient storage area when located at the end of the battery.

LOCATED UNDER FRYERS
- Filter location under fryers saves valuable space.
- Internally plumbed oil drain and return line.

EXTERIOR FEATURES
- Continuous cabinet provides a professional look.
- 5" (127 mm) deep continuous stainless steel front landing ledge.
- Stainless steel precision welded frypot.
- Includes casters, joiner strips, filter starter kit and fryer tip brush

UNIQUE FILTER PAN DESIGN
- Filter pan is designed for maximum oil return.
- Stainless steel construction is easy to clean and has a professional look.
- Positive-latching filter paper holder holds paper in place for optimal filtration.
- Quick disconnect connection offers quick and safe connection of the filtered oil back into the frypots.
- All oil drain and return lines are internally plumbed for convenience and safety.

ROLLER-PUMP
- Up to six fryers can be batteried into one fryer / filter system.
- 5.5 GPM pump with a 1/3 HP motor speeds up filtering process.
- Can pump oil into a disposal vat up to 20 feet away.

Touchscreen Digital Controls now available!

IMPERIAL

1128 Sherborn Street | Corona, CA 92879 | 800.343.7790 | imperialrange.com | imperialsales@imperialrange.com
©2026 Imperial Commercial Cooking Equipment Imperial reserves the right to change specifications at any time without prior notice

ELECTRICAL

FRYER FILTER SYSTEMS

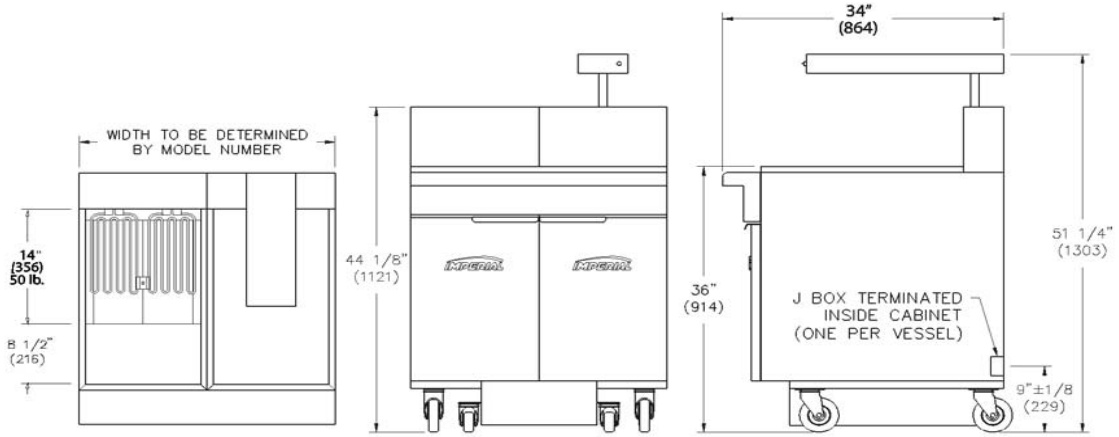

IFSCB150E

** ONE J BOX PER VESSEL**

MODEL	FRYER OIL CAPACITY	OVERALL WIDTH	NUMBER OF FRYERS	SHIP WEIGHT (KG) LBS
IFSCB150E IFSCB150EU	50 lbs. (41 L)	31" (787 mm)	1	(196) 433
IFSCB250E IFSCB250EU	50 lbs. (41 L)	46 1/2" (1181 mm)	2	(284) 626
IFSCB350E IFSCB350EU	50 lbs. (41 L)	62" (1575 mm)	3	(389) 856
IFSCB450E IFSCB450EU	50 lbs. (41 L)	77 1/2" (1969 mm)	4	(495) 1,092
IFSCB550E IFSCB550E	50 lbs. (41 L)	93" (2362 mm)	5	(655) 1,445
IFSCB650E IFSCB650EU	50 lbs. (41 L)	108 1/2" (2756 mm)	6	(770) 1,698

FILTER ELECTRICAL REQUIREMENT			
VOLTS	PHASE	HERTZ	AMPS
115 V	1	60	6.8 amps

ELECTRICAL REQUIREMENT PER FRYER					
MODEL	TOTAL KW'S	VOLTS	PHASE	HERTZ	AMPS
50 lbs./E	15.9	208	3	60	45
50 lbs./E	15.9	240	3	60	39
50 lbs./E	15.9	480*	3	60	20
50 lbs./EU	16.1	208	3	60	46
50 lbs./EU	16.1	240	3	60	40
50 lbs./EU	16.1	480*	3	60	20

* For export only

MODEL	OVERALL DIMENSIONS			CRATED DIMENSIONS		
	WIDTH	HEIGHT	DEPTH	WIDTH	HEIGHT	DEPTH
IFSCB150E IFSCB150EU	31" (787)	44 1/8" (1121)	34" (864)	32 1/2" (826)	39" (991)	49 1/2" (1257)
IFSCB250E IFSCB250EU	46 1/2" (1181)	44 1/8" (1121)	34" (864)	48" (1219)	39" (991)	49 1/2" (1257)
IFSCB350E IFSCB350EU	62" (1575)	44 1/8" (1121)	34" (864)	63 1/2" (1613)	39" (991)	49 1/2" (1257)
IFSCB450E IFSCB450EU	77 1/2" (1969)	44 1/8" (1121)	34" (864)	79" (2007)	39" (991)	49 1/2" (1257)
IFSCB550E IFSCB550E	93" (2362)	44 1/8" (1121)	34" (864)	94 1/2" (2400)	39" (991)	49 1/2" (1257)
IFSCB650E IFSCB650EU	108 1/2" (2756)	44 1/8" (1121)	34" (864)	110" (2794)	39" (991)	49 1/2" (1257)

Measurements in ( ) are metric equivalents

OPTIONS AND ACCESSORIES

- Automatic basket lifts with computerized controls
- Stainless steel tank cover
- Stainless steel side drain shelf
- Stainless steel side splash
- Goofer declogger rod
- Sediment scooper
- Filter paper 40# thickness, 20 microns, 100 sheets per box

CLEARANCE REQUIREMENTS

For use only on non-combustible floors. Legs or casters are required for non-combustible floors. Provide 0" clearance from non-combustible surfaces and 6" (152 mm) from combustible surfaces.

SANITATION

MADE IN USA

IMPERIAL

1128 Sherborn Street | Corona, CA 92879 | 800.343.7790 | imperialrange.com | imperialsales@imperialrange.com

©2026 Imperial Commercial Cooking Equipment Imperial reserves the right to change specifications at any time without prior notice and without any obligation for past or future equipment purchases. Visit www.imperialrange.com for specification updates