5" Stainless Steel Swivel Plate Caster & Polyurethane Wheel

Casters

Certifications:

NSF

Features:

- Stainless Steel Caster
- 2-3/8"" x 3-5/8" Plate
- 5" Polyurethane Wheel Resistant to Acids & Caustics
- Temperature Range -45º to 180ºF
- 300# Weight Cap. per Caster

Material:

- Polyurethane Wheel, Resistant to acids & caustics
- T-304 Stainless Steel

Part Number	Description	Overall Height	Brake
5SS-1PT-PLY	5" Polyurethane Wheel Caster	6"	None
5SS-1PT-PLY-TLB	5" Polyurethane Wheel Caster	6"	Top Lock Brake

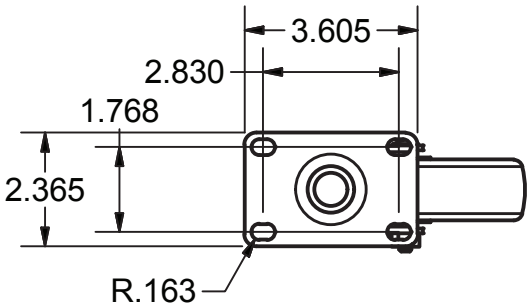

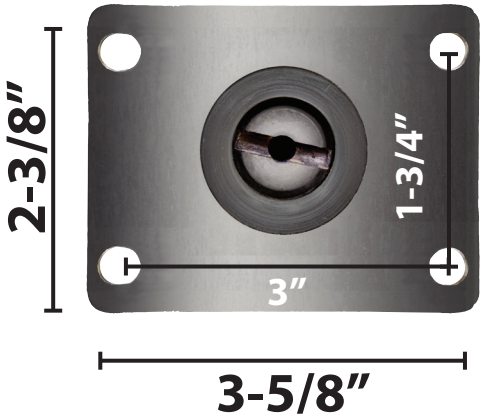

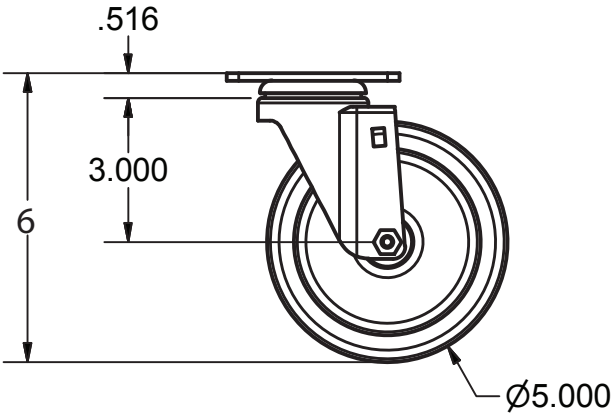

PRODUCT DATA SHEET

BK RESOURCES

© BK Resources August 2026

Phone: 888-310-4393 | Fax: 888-310-4394 | Website: www.bk-resources.com | Email: sales@bk-resources.com