ADVANCE TABCO®
SMART FABRICATION™

STAINLESS STEEL

REGALINE SINKS NSF

T9 SERIES







Item #: _____ Qty #: _____

Model #: _____

Project #: _____



T-9 Series Adjustable Side Cross-Bracing



Recessed Bowl Surface Accommodates Poly-Vance Cutting Boards & Sink Covers



YES! It's SeaMLess!

Deep Drawn Bowls Are Seamless And Drawn Out Of A Single Sheet Of Steel

FEATURES:

Tile edge for ease of installation.

One piece **Deep Drawn** sink bowls with integral drainboards with splash.

Featuring the single bowl unit design.

All sink bowls have a large liberal 3" radius.

"T-9" Series is supplied with adjustable side cross braces featuring leg clamps.

CONSTRUCTION:

All TIG welded.

Welded areas blended to match adjacent surfaces and to a satin finish.

Gussets welded to a die-embossed reinforcing channel.

MECHANICAL:

Supply is 1/2" IPS hot & cold.

Faucet holes on 8" centers.

Faucets are not included **(see accessories)**.

Waste drains are 1 1/2" IPS S/S basket type, located in center of sink bowl, and are included.

MATERIAL:

1 5/8" diameter galvanized legs and gussets.

1" adjustable plastic bullet feet.

Bowls are heavy gauge stainless steel type 304 series.

Drainboards, splash and rolled rims are fabricated using heavy gauge stainless steel type 304 series.

ADVANCE TABCO®
SMART FABRICATION™
www.advancetabco.com

Customer Service Available To Assist You 1-800-645-3166 8:30 am - 7:00 pm E.S.T.

For Orders & Customer Service:
Email: customer@advancetabco.com or **Fax:** 631-242-6900

For Smart Fabrication™ Quotes:
Email: smartfab@advancetabco.com or **Fax:** 631-586-2933

DIMENSIONS and SPECIFICATIONS

12” Water Level Accommodates Pot & Dish Applications

TOL Overall: ± .500” Interior: ± .250”

ALL DIMENSIONS ARE TYPICAL

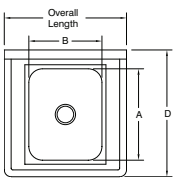

1 Compartment Shown

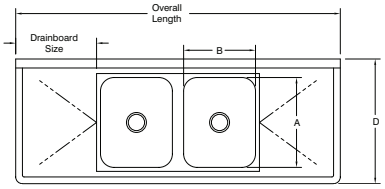

2 Compartment With 2 Drainboards Shown

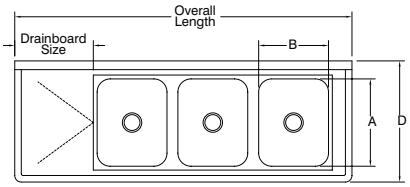

3 Compartment With 1 Left Drainboard Shown

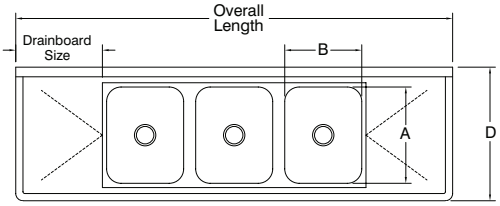

3 Compartment With 2 Drainboards Shown

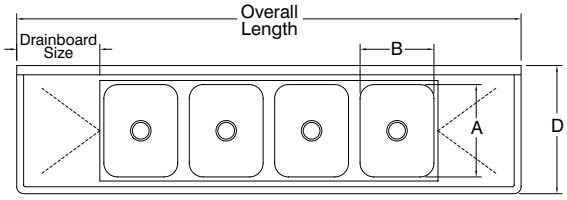

4 Compartment With 2 Drainboards Shown

BOWL SIZE	Overall Length	# Of Comp.	# Of Drbds.	Drbd. Size	Approx. Ship Wt.	Recommended Use	MODEL #	A	B	C	D	V	W	X	Y	Z
16”x20”	27”	One	None	-	65 lbs.	DISH SINKS	T9-1-24	20”	16”	14-1/8”	28”	38”	8”	12”	21”	42”
16”x20”	44”	One	One	18”	87 lbs.	DISH SINKS	T9-1-24-18RorL	20”	16”	14-1/8”	28”	38”	8”	12”	21”	42”
16”x20”	72”	Two	Two	18”	232 lbs.	DISH SINKS	T9-2-36-18RL	20”	16”	14-1/8”	28”	38”	8”	12”	21”	42”
16”x20”	64”	Three	None	-	118 lbs.	DISH SINKS	T9-3-54	20”	16”	14-1/8”	28”	38”	8”	12”	21”	42”
16”x20”	**78”	Three	One	18”	260 lbs.	DISH SINKS	T9-3-54-18RorL	20”	16”	14-1/8”	28”	38”	8”	12”	21”	42”
16”x20”	91”	Three	Two	18”	295 lbs.	DISH SINKS	T9-3-54-18RL	20”	16”	14-1/8”	28”	38”	8”	12”	21”	42”
16”x20”	103”	Three	Two		325 lbs.	DISH SINKS	T9-3-54-24RL	20”	16”	14-1/8”	28”	38”	8”	12”	21”	42”
20”x28”	103”	Three	Two	18”	345 lbs.	PAN SINK	T9-83-60-18RL	28”	20”	18-1/8”	36”	38”	8”	12”	21”	42”

*** Requires 2 Faucets** **** Specify Drainboard Location**

PLUMBING ROUGH-IN

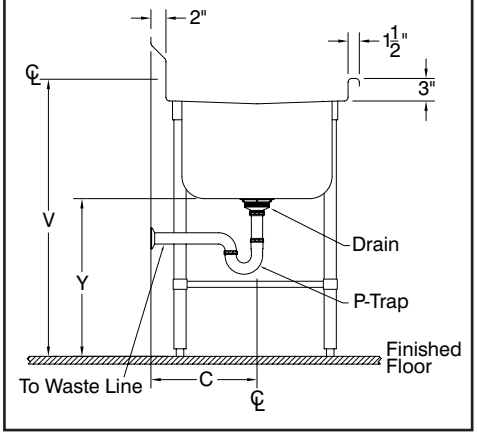

MECHANICAL:

- Supply is 1/2” IPS hot & cold.
- Faucet holes on 8” centers.
- Faucets are not included **(see accessories)**.
- Waste drains are 1 1/2” IPS S/S basket type, located in center of sink bowl, and are included.

SECTION

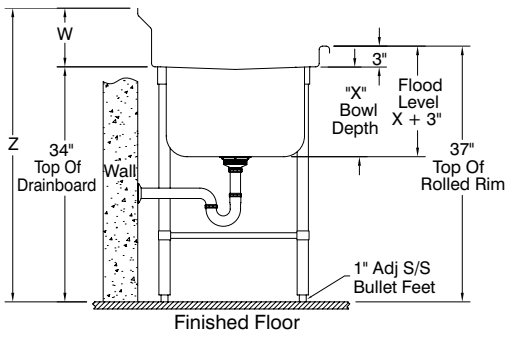

ADVANCE TABCO
SMART FABRICATION™

ADVANCE TABCO is constantly engaged in a program of improving our products. Therefore, we reserve the right to change specifications without prior notice.

325 Wireless Boulevard, Hauppauge, NY 11788

© ADVANCE TABCO, NOVEMBER 2026