ADVANCE TABCO
SMART FABRICATION™

STAINLESS STEEL

Underbar Hand Sinks

18” and 21” Wide Units

Item #: _____ Qty #: _____
Model #: _____
Project #: _____

SL-HS Series
18” Wide Units With Splash Mount Faucets

CR-HS Series
21” Wide Units With Deck Mount Faucets

Conforms To NSF 61/9 Lead Free Requirements

FEATURES:

29” Working Height
10” x 14” x 7” sink bowl.
4” backsplash.
Includes four galvanized legs with adjustable plastic bullet feet.
Adjustable galvanized side cross-bracing.
CR-HS Series has rear deck for extra storage

MECHANICAL:

SL-HS Series: Includes K-125 splash mount swing spout faucet.
CR-HS Series: Includes K-51 deck mount swing spout faucet.
All faucets meet federal lead free standards.
1 1/2” IPS drain

MATERIAL:

Sink Bowl & Sides: 20 gauge, 300 stainless steel
Front Apron & Backsplash: 22 gauge, 300 stainless steel
Legs: 1 5/8” O.D. 18 gauge, galvanized steel with adjustable plastic bullet feet

OPTIONAL:

A-15 - Chrome towel ring (packed loose)
K-316-LU - Add wrist handles
SU-10A - 18” stainless steel leg upgrade with cross-bracing
SU-18R or L - Right or left side splash for 18” wide sink
SU-18RL - Right and left side splash for 18” wide sink
SU-21R or L - Right or left side splash for 21” wide sink
SU-21RL - Right and left side splash for 21” wide sink
SU-40 - Prep unit for installation of speed rail

For More Accessories & Modifications, Visit Us At www.advancetabco.com.

18” WIDE Model #	Approx. Weight	Approx. Cu. Ft.	21” WIDE Model #	Approx. Weight	Approx. Cu. Ft.	O.A. Length (A)	Drain Location (B)
SL-HS-12	31 lbs.	5	CR-HS-12	32 lbs.	5	12”	6”
SL-HS-15	34 lbs.	6	CR-HS-15	35 lbs.	6	15”	7 1/2”

⚠ **WARNING:** Equipment that include faucets on this page may contain a chemical known to the State of California to cause cancer, birth defects or other reproductive harm.

ADVANCE TABCO
SMART FABRICATION™
www.advancetabco.com

Customer Service Available To Assist You 1-800-645-3166 8:30 am - 7:00 pm E.S.T.

For Orders & Customer Service:
Email: customer@advancetabco.com or **Fax:** 631-242-6900

For Smart Fabrication™ Quotes:
Email: smartfab@advancetabco.com or **Fax:** 631-586-2933

DIMENSIONS and SPECIFICATIONS

TOL Overall: ± .500” Interior: ± .250”

ALL DIMENSIONS ARE TYPICAL

SL-HS Series

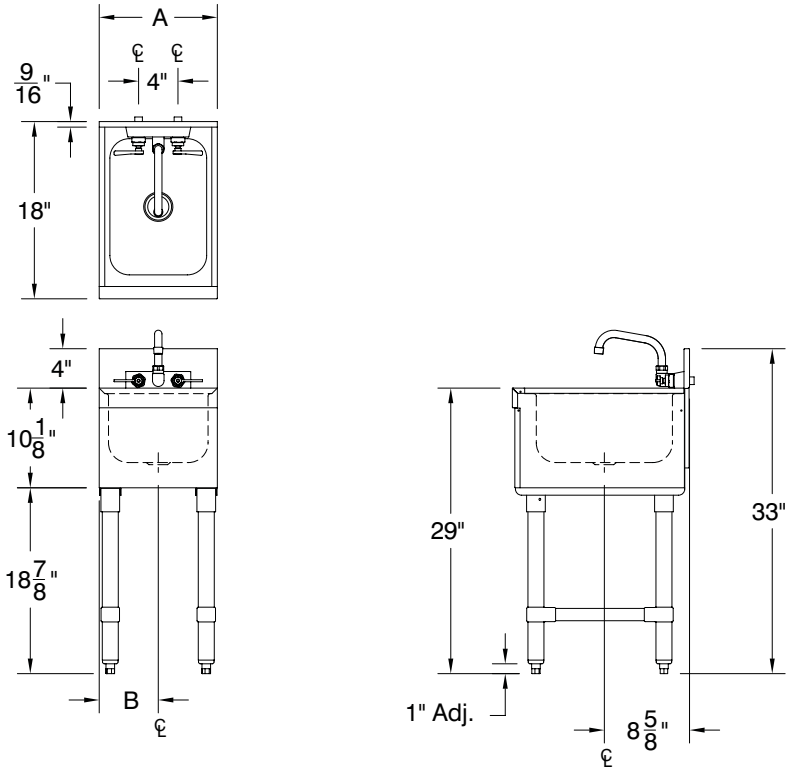

CR-HS Series

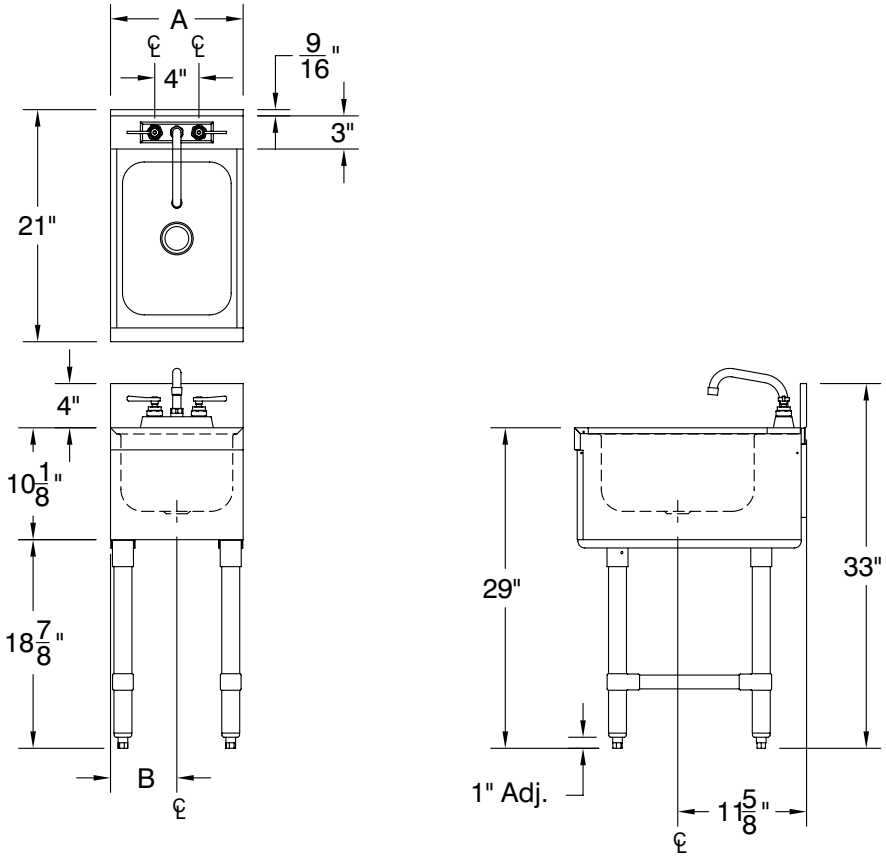

ADVANCE TABCO
SMART FABRICATION

REF-U

325 Wireless Boulevard, Hauppauge, NY 11788

ADVANCE TABCO is constantly engaged in a program of improving our products. Therefore, we reserve the right to change specifications without prior notice.

© ADVANCE TABCO, DECEMBER 2025