Lincoln

DIGITAL COUNTERTOP IMPINGER (DCTI) ELECTRIC OVEN

MODELS

- V2530
- 2500/V2500
- 2505
- 2507
- 2508/V2508
- 2509/V2509
- 2510/V2510
- 2512/V2512
- 2514/V2514

BENEFITS

Impingement Technology

Air impingement uses hot air under pressure which surrounds food with small jets of hot air. This allows for rapid heating, cooking, baking and crisping of foods, two to four times faster than conventional ovens, depending on food product cooked.

Uniform Heating

Uniform heating/cooking of food products offers a wide tolerance for rapid baking at a variety of temperatures

Variable Speed Continuous Cook Platform

Variable speed continuous cook platform moves product through the oven one after another improving product flow during cooking eliminating the need for constant tending resulting in reduced labor.

Ventless

Ventless ovens equipped with catalysts are available for ventless installations.



Shown with 31" (778mm) standard conveyor.



Shown with 50" (1270mm) extended conveyor.

SPECIFICATIONS

General:

- Stainless steel top, front and sides
- 20" (508mm) wide baking chamber
- Stackable up to two high
- 3.25" conveyor opening
- 4" legs

Controls:

- Adjustable temperature from 90°F (32°C) to 600°F (315°C) to accommodate a wide range of products
- Adjustable conveyor speed from 30 seconds to 15 minutes cooking time for menu flexibility
- Digital controls feature reversible conveyor direction, manual override, speed, temperature, and four (4) pre-set menu buttons with menu item, cook time and temperature displayed

Conveyor:

- 16" wide x 31" conveyor standard with crumb trays
- 16" wide x 50" conveyor with crumb trays (optional)
- 16" wide x 50" non-stick conveyor with crumb tray (optional)

Options:

- KNLZ certified models available for ventless operation
- Quiet bake option (add -4 to model number)
- 4" and 12" entry and exit shelves
- Conveyor end stop
- Stand with bottom shelf and casters for single and double stacking

Single stack dimensions:

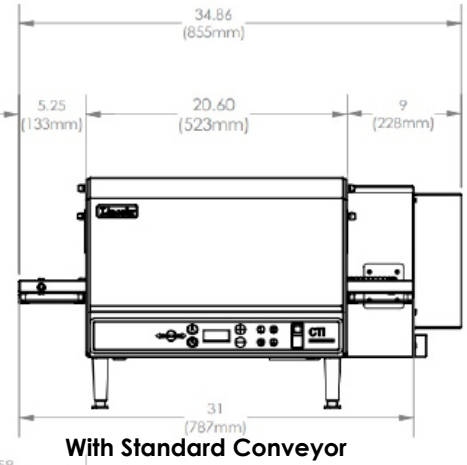

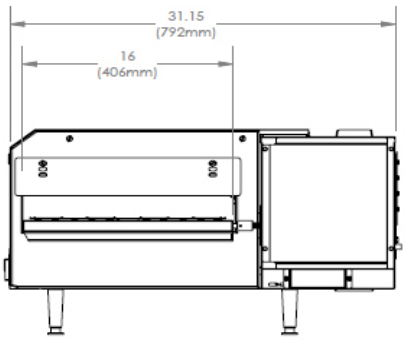

With Standard Conveyor

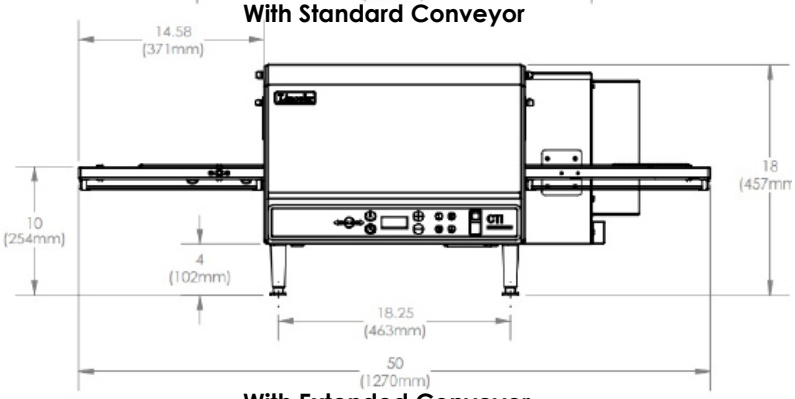

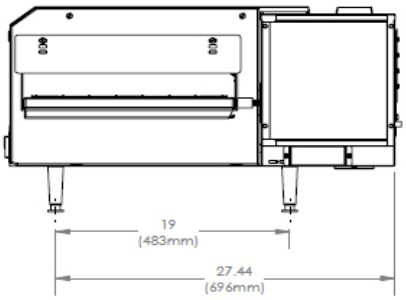

With Extended Conveyor

Double stack dimensions:

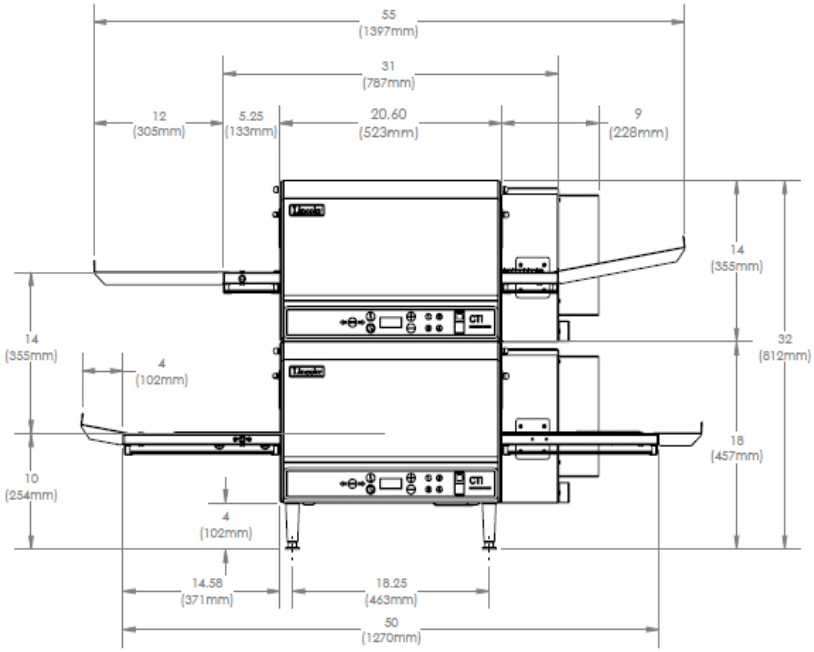

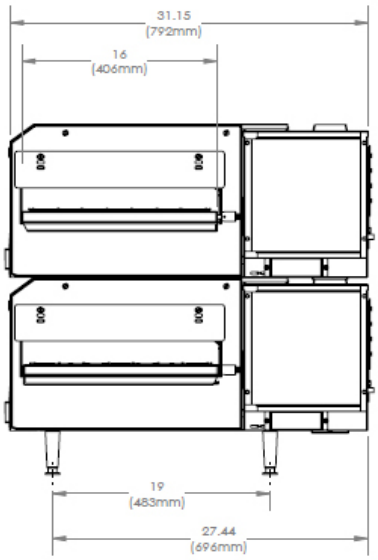

DIGITAL COUNTERTOP IMPINGER (DCTI) ELECTRIC OVEN

WELBILT
an Ali Group Company

Lincoln

DIMENSIONS

	WIDTH (31" CONVEYOR)*	WIDTH (50" CONVEYOR)**	DEPTH	HEIGHT	WEIGHT	SHIPPING WEIGHT	APPROXIMATE SHIPPING DIMENSIONS				
SINGLE STACK	34.72" (881 mm)	50" (1270 mm)	31.15" (792 mm)	18" (457 mm)	150 lb (68 kg)	225 lb (102 kg)	CU. FT.	W	D	H	CLASS
DOUBLE STACK	34.72" (881 mm)	50" (1270 mm)	31.15" (792 mm)	32" (813 mm)	350 lb (159 kg)	450 lb (204 kg)	35	61" (1549 mm)	42" (1067 mm)	24" (610 mm)	85

*1353 - 31" STANDARD CONVEYOR
**1346 - 50" EXTENDED CONVEYOR | 1366 - 50" NON-STICK EXTENDED CONVEYOR

MODEL SPECIFICATIONS

DOMESTIC MODELS	INPUT RATE	AMPS	VOLTAGE	HERTZ	PHASE	# OF WIRES	CERTIFICATIONS	PLUG
2500/V2500	6kW	27/31	208/240	60	1	3	NSF, UL	NEMA 6-50P
V2530	5kW	24/28	208/240	60	1	3	NSF, UL	NEMA 6-30P

EXPORT MODELS	INPUT RATE	AMPS	VOLTAGE	HERTZ	PHASE	# OF WIRES	CERTIFICATIONS
2505	6kW	15	380/220	50	1	4	NSF
2507	6kW	18	200	50/60	3	5	NSF
2508/V2508	6kW	10	380/220	50	3	5	NSF, CE
2509/V2509	6kW	8	415/240	50	3	5	NSF, CE
2510/V2510	6kW	28	220	50/60	1	3	NSF
2512/V2512	6kW	9	400/230	50	3	5	NSF, CE
2514/V2514	6kW	25	240	50	1	3	NSF, CE

V denotes ventless model. Ventless model has been tested to UL710B standards and is KNLZ listed.
Standard Configuration: 3100 RPM
Quiet Configuration (add "-4" to model number): 1750 RPM for reduced noise configuration.

Electrical Service:
Each oven is shipped with a factory installed cord and plug as indicated in the specification table above. A separate circuit breaker is required for each oven deck with the proper voltage, amperage, phase and hertz as indicated by model number. For Canadian installation, only 2530 models operated on a 208V supply be used with a 30A plug, in compliance with the Canadian Electrical Code (CEC) requirements.

Ventilation Requirements:
Ventilation is recommended, but not required. Local codes prevail. These are the 'authority having jurisdiction' as stated by the National Fire Protection Association, Inc. in NFPA-96-1994.

Recommended Minimum Clearances:
Rear of oven to combustible surface: 6" (152 mm). Clearance on right side from other cooking equipment: 24" (610 mm).

Warranty:
DCTI (2500 Series) - Eighteen (18) months

DIGITAL COUNTERTOP IMPINGER (DCTI) ELECTRIC OVEN