PROJECT: _____

ITEM # _____ QTY: _____

MODEL # _____

AIA # _____ SIS # _____

FORCED AIR SCHOOL MILK COOLER

VMCF58-1-S-HC

POWERED BY V-CORE

SINGLE ACCESS, FORCED AIR: SCHOOL MILK SERIES

EXCLUSIVE WARRANTY

- **7 Year Parts, Labor and Compressor**
- **Exclusive 2 Year Warranty On Magnetic Door Gaskets**
- **Lifetime Warranty On Handles & Hinges (parts only)**



CABINET CONSTRUCTION

- Stainless Steel Exterior And Interior
- Stainless Steel Lid, Hinges Door And Door Latches
- Full Electronic Control
- Heavy-Duty Epoxy Coated Steel Wire Floor Racks Standard
- Floor Drain Is Centrally Located For Easy Cleaning
- Flexible Compression Door Gaskets Ensure Tight Seal
- Self-Latching Doors/Lids With Safety Bumpers

FEATURES

- Exterior Thermometer
- Cylinder Lock
- 6" Heavy-Duty Plate Casters (2 with locks)

REFRIGERATION

- Refrigeration System Uses R-290 Refrigerant To Comply With All Environmental Concerns
- Epoxy Coated Evaporator Coil
- Balanced, Forced-Air Refrigeration System Provides Rapid Chilling Of Product
- Maintains Product Temperature Between 36° - 40°F

ENERGY STAR

Please Verify Qualifying Units By Visiting:
www.energystar.gov/cfs

OPTIONS & ACCESSORIES

- Corner Bumpers
- Cafeteria Tray Slides
- Graphics

3779 Champion Blvd, Winston-Salem, NC 27105

ph: (888) 845-9800 | fax: (800) 253-5168

Sales@VictoryRefrigeration.com | VictoryRefrigeration.com

Rev. 5/30/25 Printed in U.S.A.

APPROVAL: _____ DATE: _____

VICTORY FORCED AIR SCHOOL MILK COOLER

VMCF58-1-S-HC

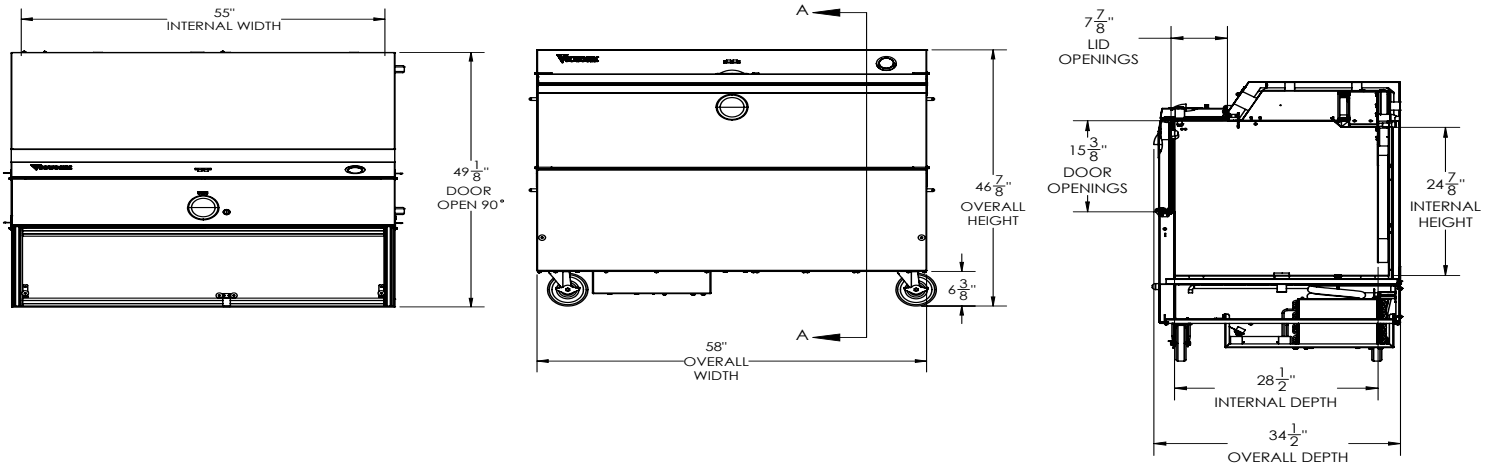

We reserve the right to change specifications and product design without notice. Such revisions do not entitle the buyer to corresponding changes, improvements, additions or replacements for previously purchased equipment. Dimensional tolerances +/- 1⁄4". Metric dimensions (MM)

4 ⅜" bottom clearance is required

CHARACTERISTICS		ELECTRICAL DATA		SHIPPING DETAILS	
Net Capacity (cubic ft.)	22.56	Cabinet Voltage	115/60/1	Height	54"
Width, Overall (in.)	58"	Total Amperes	2.46	Width	63"
Depth, Overall (in.)	34 1/2"	NEMA Plug (8' cord)	5-15P	Depth	38"
Height Overall (with casters)	46 7/8"	**REFRIGERATION DATA**		Crated Weight	460 lbs
Depth, Door Open 90°	49 1/8"	Condensing Unit Size, HP	1/3		
No. Of Lids/Doors	1/1	Refrigerant	R290		
Case Capacity	16 - 13" X 13" X 11" 10 - 19" X 13" X 11"	Capacity (BTU/HR) (100°F/20°F)	2052		
		Heat Rejection (BTU/HR)	3078		
		Charge (lbs/grams/ounces)	0.154 / 70 / 2.47		

3779 Champion Blvd, Winston-Salem, NC 27105 | ph: (888) 845-9800 | fax: (800) 253-5168

Sales@VictoryRefrigeration.com | VictoryRefrigeration.com

Rev. 5/30/25 Printed in U.S.A.

WELBILT
an Ali Group Company