ZEPHAIRE-100-E

Full-Size, Standard Depth Electric Convection Oven



Project _____

Item No. _____

Quantity _____

ZEPHAIRE-100-E

Standard depth baking compartment - accepts five 18" x 26" standard full-size baking pans in left-to-right positions

All data is shown per oven section, unless otherwise indicated.

Refer to operator manual specification chart for listed model names.

EXTERIOR CONSTRUCTION

- Full angle-iron frame
- Stainless steel front, top, and sides
- Dual pane thermal glass windows encased in stainless steel door frames
- Powder coated door handle with simultaneous door operation
- Triple-mounted pressure lock door design with turnbuckle assembly
- Removable front control panel
- Solid mineral fiber insulation at top, back, sides and bottom

INTERIOR CONSTRUCTION

- Double-sided porcelainized baking compartment liner (14 gauge)
- Aluminized blower wheel
- Five chrome-plated racks, eleven rack positions with a minimum of 1-5/8" (41mm) spacing

OPERATION

- Three tubular heaters
- Solid state thermostat with temperature control range of 200°F (93°C) to 500°F (260°C)
- Two speed fan motor
- 1/2 horsepower blower motor with automatic thermal overload protection
- Control area cooling fan
- Two interior oven lamps

STANDARD FEATURES

- SSI-M - solid state infinite control with separate dials for thermostat and timer
- 25" (635mm) adjustable stainless steel legs (for single units)
- 6" (152mm) adjustable stainless steel legs (for double sections)
- Two year parts and two year labor warranty*
- Three year limited oven door warranty*

** For all international markets, contact your local distributor.*

NOTE: The company reserves the right to make substitutions of components without prior notice

OPTIONS AND ACCESSORIES

(AT ADDITIONAL CHARGE)

- **Legs, casters & stands**
  - ❑ 6" (152mm) seismic legs
  - ❑ 6" (152mm) casters
  - ❑ 4" (102mm) low profile casters (double only)
  - ❑ 25" (635mm) stainless steel open stand withrack guides
  - ❑ 29" fully welded stand
- ❑ SSD - solid state digital control with LED display, Cook & Hold and Pulse Plus®
- ❑ VLF ventless hood
- ❑ Extra oven racks
- ❑ Vent connector
- ❑ 480 VAC, 3 phase
- ❑ Extended labor warranty

OPTIONS AND ACCESSORIES

(AT NO ADDITIONAL CHARGE)

- ❑ Solid stainless steel doors

Intertek NSF ENERGY STAR CE

www.blodgett.com
42 Allen Martin Drive, Essex Junction, VT 05452
Phone: (802) 658-6600 | Fax: (802) 864-0183

P/N 52775 Rev N (10/26)

ZEPHAIRE-100-E

APPROVAL/STAMP

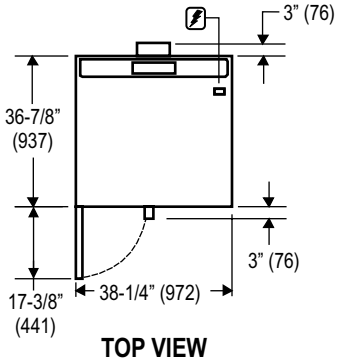

TOP VIEW

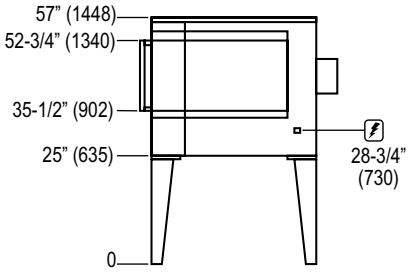

SINGLE

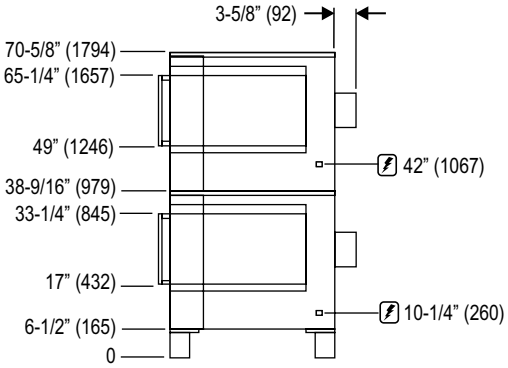

DOUBLE

SHORT FORM SPECIFICATIONS Provide Blodgett full-size convection oven model ZEPHAIRE-100-E, (single/double) compartment. Each compartment shall have porcelainized steel liner and shall accept five 18" x 26" standard full-size bake pans in left to right positions. Doors shall have dual pane thermal glass windows with single powder coated handle and simultaneous operation. Unit shall be electrically heated with three tubular heaters. Air in baking chamber distributed by single inlet blower wheel powered by a two-speed, 1/2 HP motor with thermal overload protection. Each chamber shall be fitted with five chrome-plated removable racks. Control panel shall be recessed with Cook/Cool Down mode selector, solid state infinite control with separate dials for thermostat and timer. Provide options and accessories as indicated.

DIMENSIONS

Floor space	38-1/4" (972mm) W x 36-7/8" (936mm) L
Interior	29" (737mm) W x 20" (508mm) H x 24-1/4" (616mm) D
If oven is on casters	
Single	Add 4-1/2" (114mm) to height
Double	Height dimensions remain the same
Double Low Profile	Subtract 2.5" (64mm) from all height dimensions

PRODUCT CLEARANCE

From combustible and non-combustible construction

1/2" (13 mm)

Optional Heat Shield provides 1.25" Air Gap

MINIMUM ENTRY CLEARANCE

Uncrated	32-1/16" (814mm)
Crated	37-1/2" (953mm)

SHIPPING INFORMATION

Approx. Weight

Single	480 lbs. (218 kg)
Double	960 lbs. (435 kg)

Crate Size

37-1/2" (952mm) x 43-1/2" (1105mm) x 51-3/4" (1315mm)
(2 crates required for double)

MAXIMUM INPUT

11KW per oven section

POWER SUPPLY

VAC	Hz	Phase	kW	Amps (L1-L2-L3)
208	60	1	11	51/0/51
208	60	3	11	31/29/29
220/240	60	1	11	44/0/44
220/240	60	3	11	26/24/24
440	60	3	11	15/14/14
480	60	3	11	14/13/13

1/2 H.P., 2 speed motor, 1120 and 1710 RPM (60Hz.)

VAC	Hz	Phase	kW	Amps (L1-L2-L3-N)
220/240	50	1	11	48/0/0/48
240/415	50	3	11	18/14/14/4
230/400	50	3	11	18/15/15/3