INDIGO® NXT

iP0420

Manitowoc 50 Hz Ice Cube Machine

IDP0420A | IYP0420A



Indigo NXT Series iP0420
Ice machine on D320C bin
Ice machine and bin sold separately.

50 Hz

ICE SHAPES



- **Half-Dice:**
  0.95 x 2.86 x 2.22 cm
  (3/8" x 1 1/8" x 7/8")



- **Dice:**
  2.22 x 2.22 x 2.22 cm
  (7/8" x 7/8" x 7/8")

SIZE

- Up to 198 kgs (436 lbs)
  of daily ice production

SPECIFICATIONS

Refrigerant: R290

- 240 g

BTU Per Hour

- 3,604 (average)
- 6,435 (peak)

Compressor: Nominal rating 1 HP

Operating Limits:

- Ambient temperature range: 4.4˚ to 43.3˚C (40˚ to 110˚F)
- Water temperature range: 4.4˚ to 32.2˚C (40˚ to 90˚F)
- Water pressure ice maker (water in)
  - Min. 137.9 kPA (20 psi)
  - Max. 551.1 kPA (80 psi)

Power

230/50/1

- Instant Power
  - 1056W
- Total Amps
  - 4.59 amps
- Maximum Fuse Size
  - Air-cooled: 15 amps

FEATURES

- Sanitation
  - Hinged front door and removable components (water trough, tube, curtain, probe, pump) allow easy interior access and cleaning.
  - Select parts feature AlphaSan® antimicrobial protection.
  - Durable 304 stainless steel exterior resists corrosion.
  - Optional LuminIce® Growth Inhibitor helps control bacteria and yeast, with status indicator on display.
- Sustainability & Value
  - R290 natural refrigerant offers high performance with low global warming potential.
  - Icon-based easyTouch® display simplifies operation.
  - Acoustical probe and Active Sense ensure consistent ice production.
  - 24-hour diagnostics support preventative maintenance.
  - Programmable ice production reduces energy costs.
  - Lower lifetime cost through reduced energy and water use.

ACCESSORIES

- LuminIce® II Virus and Bacteria Inhibitor
  Controls viruses and bacteria in the ice machine.
- External Scoop Holder
  Protect the ice scoop with the NSF approved versatile scoop holder.
- Arctic Pure® Plus Water Filters
  Reduce sediments and chlorine contaminants down to 0.5 microns. Use with a pre-filter is recommended.



Luminice II



External Scoop Holder



Arctic Pure Water Filters

Manitowoc
FROM PENTAIR WATER SOLUTIONS

INDIGO NXT iP0420

Manitowoc 50 Hz Ice Cube Machine

IDP0420A | IYP0420A

INSTALLATION

Minimum installation clearance:
Top/side: 30.5 cm (12")
Back is 12.7 cm (5")

Installation location must be indoors.

A Electrical Entrance (2) Options

B 3/8" (0.95 cm) F.P.T.
Water Condenser Inlet
(water-cooled units)

C 1/2" (1.27 cm) F.P.T.
Water Condenser Outlet
(water-cooled units)

D 1/2" (1.27 cm)
Auxiliary Base Drain Socket

E 3/8" (0.95 cm) F.P.T.
Ice Making Water Inlet

F 1/2" (1.27 cm) F.P.T.
Ice Making Water Drain

G 3/4" (1.91 cm)
Bin Drain

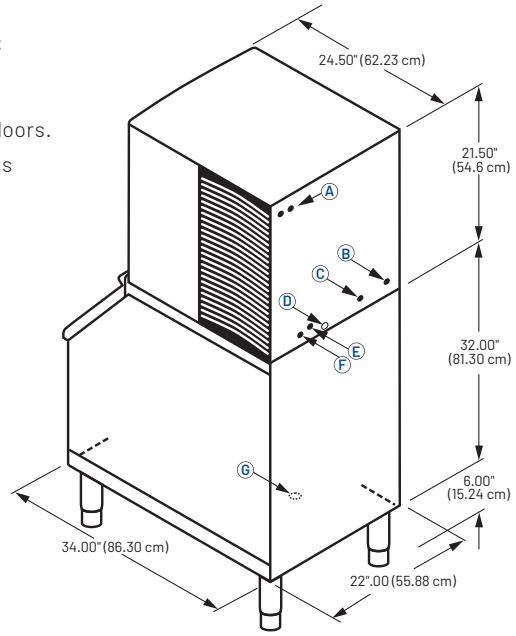

SPACE-SAVING DESIGN





	iP0420 D320C	iP0420 D420C
Height	59.50" 151.13 cm	71.5" 181.61 cm
Width	22.0" 55.9 cm	22.0" 55.9 cm
Depth	34.0" 86.36 cm	34.0" 86.36 cm
Bin Storage	264 lbs 120 kgs	383 lbs 174 kgs

Height includes adjustable bin legs 6.00" to 8.00", (15.24 to 20.32 cm) set at 6.00" (15.24 cm).

Bin capacity is based on 90% of the volume x 33 lbs/ft³ average density of ice.

Ice machine and bin sold separately.

SPECIFICATIONS

	Model	Ice Shape	Shipping Weight	Ice Production 24 Hours: 70°Air/50°F Water 21°Air/10°C Water		Ice Production 24 Hours: 90°Air/70°F Water 32°Air/21°C Water		Power Usage kWh per 45.4 kgs of ice @ 90° Air/70°F Water	Potable water usage L per 45.4kgs ice (32° Air/21°C Water)
Air Cooled	IDP0420A	Dice	62 kgs	432 lbs	196 kgs	380 lbs	172 kgs	4.66	53.8 L (14.22 gal)
	IYP0420A	Half Dice	62 kgs	436 lbs	198 kgs	395 lbs	180 kgs	4.48	51.6L (13.63 gal)

Order separately: Ice storage bin for all units.
R290 is a refrigerant grade propane which is naturally occurring with no ozone depletion potential and extremely low global warming potential.

Limited Commercial Warranty

Ice Maker Three (3) years parts and labor

Evaporator Five (5) years parts and labor

Compressor Five (5) years parts, three (3) years labor

Manitowoc
FROM PENTAIR WATER SOLUTIONS

2110 South 26th Street | Manitowoc, WI 54220 | United States
+1.920.682.0161 | 920.683.7589 Fax | manitowocice.com

All indicated Pentair trademarks and logos are property of Pentair. Third party registered and unregistered trademarks and logos are the property of their respective owners. ©2025 Pentair. All rights reserved.