ROTARY GLASSWASHER
PKBR24 SERIES

c UL us LISTED
COMMERCIAL
DISHWASHER
864T

JOB	
AREA	
ITEM NO.	
MODEL NO.	

PKBR24	**CHEMICAL STATUS PANEL ON FRONT**
PKBR24L	**CHEMICAL STATUS PANEL ON LEFT**
PKBR24R	**CHEMICAL STATUS PANEL ON RIGHT**

- All stainless steel construction with 16-gauge stainless steel wash tank
- Cleans and sanitizes 720 glasses per hour
- Easy to clean and maintain
- Upper and lower wash arms with fan-spray nozzles clean glasses inside and out
- Fill and dump cycle provides clean water for each wash cycle
- Wash tank heater maintains water temperature between cycles
- Pitched, vinyl-coated glass racks help drain excess water off glassware and are removable for more efficient glass handling
- Metal divider separates the load and wash areas, eliminating the need for curtains
- Divider safety switch stops wash cycle when divider is rotated
- Peristalic metering pumps with hand-adjusted controls dispense detergent, sanitizer and rinse aid
- Illuminated sight glasses permit visual inspection of chemical flows during the wash cycle

Available option:
- Second year extended parts and labor warranty (includes one (1) year parts and labor warranty)

Note:
- Some US States may require Energy Star ratings for Commercial Dishwashers. The specifier or installer is responsible for knowing their local codes, standards, and regulatory requirements.

Form No. 021497
Rev. 06.10.2020

ROTARY GLASSWASHER
PKBR24 SERIES

WATER CONSUMPTION, GALLONS (LITERS)	**Per Rack**	1.7 gallons (6.4 liters)
	Per Hour	51 gallons (193 liters)
OPERATING CYCLE	**Wash Time, Seconds**	60
	Sanitizer Time, Seconds	35
	Dwell Time, Seconds	25
	Total Cycle Time	120
OPERATING CAPACITY	**Glasses per Hour**	720
	Wash Tank Capacity, Gallons (lt)	1 (3.785)
	Pump Capacity, Gallons per Minute (lt)	24 (90.85)
WATER REQUIREMENTS	**Required Minimum Temperature***	120°F (49°C)
	Recommended Temperature**	130°-140°F (54-60°C)
	Water Inlet, Inches (cm)	1/2 NPTM (127)
	Drain Connection, Inches (cm)	1-1/4 (31.75) IPS PVC socket to include an air gap
	Rinse Pressure Set	20 +- 5psi (1.41 kg/cm²)

TANK HEATER, Kw	6.5	
CYCLE TEMPERATURES	**Wash**	130°F-140°F (54°C-60°C)
	Rinse	120°F-140°F (49°C-60°C)
FRAME DIMENSIONS	**Depth, Inches (mm)**	24 (610)
	Width, Inches (mm)	24 (610)
	Height, Inches (mm)	39-1/4 (1001)/ 40-1/4 (1026)
	Maximum Glass Height, Inches (mm)	10 (254)
WASH PUMP MOTOR	1/5 HP	
ELECTRICAL RATING	**Volts Hz**	120 U.S./230 Metric 1 PH-60 Hz
	Total Amps	5.4
APPROXIMATE SHIPPING WEIGHT, Lbs. (kg)	225 (103)	

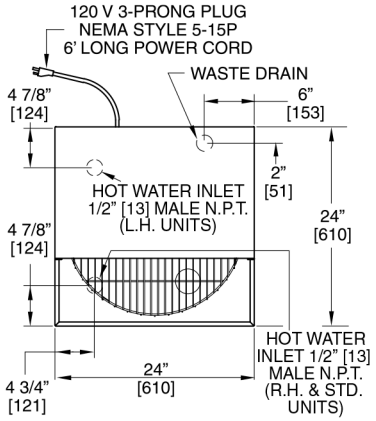

TOP VIEW

* PARTS INCLUDED IN PLUMBER'S HOOKUP KIT

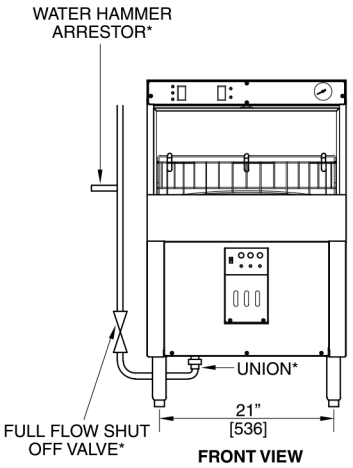

FRONT VIEW

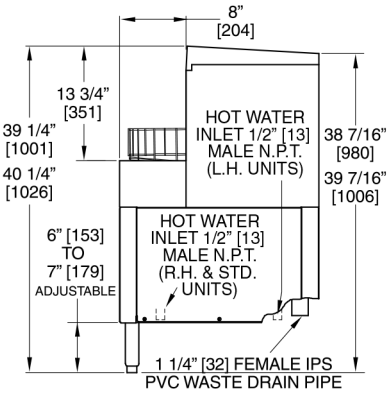

RIGHT END VIEW

Warning: Electrical and plumbing connections must be made by a qualified service person who complies with all federal, state and local health, electrical, plumbing and safety codes.

PERLICK CORPORATION 8300 W. Good Hope Rd., Milwaukee, WI 53223 • (800) 558-5592 • perlick.com