ADVANCE TABCO®
SMART FABRICATION™

STAINLESS STEEL

Glass Rack Storage Units

21" Wide Units

Item #: _____ Qty #: _____

Model #: _____

Project #: _____



CRCR-24 Shown
Holds Up To 3 Glass Racks



Adjustable Stainless Steel Glass Rack Slides



1" IPS Drain

CRCR-24-CT Shown
Holds Up To 3 Glass Racks

FEATURES:

Enclosed base case with adjustable stainless steel glass rack slides.

Holds up to three glass racks.

Flat or corrugated tops available.

Drain located in back right of top.

3" diameter hole in back panel for plumbing.

Stainless steel legs with adjustable stainless steel bullet feet.

4" backsplash.

CRCR-24: 1" IPS drain hole in bottom shelf (Centered).

CRCR-24-CT: 1" IPS drain hole in top (Right rear) and in bottom shelf (Centered).

MATERIAL:

20 gauge, 300 stainless steel.

Backsplash: 22 gauge, 300 stainless steel.

Glass Rack Slides: 18 gauge, 300 stainless steel.

Drainboard: 22 gauge, 300 stainless steel.

Legs: 1 5/8" O.D. 16 gauge, stainless steel. with adjustable plastic bullet feet.

MECHANICAL:

CRCR-24 - One 1" IPS drain

CRCR-24-CT - Two 1" IPS drains

Model #	Description	Size W x L x H	Top Drain Location L x W	Glass Rack Capacity*	Approx. Ship Weight	Approx. Cu. Ft.
CRCR-24	Flat Top	21" x 24" x 33"	N/A	3	61 lbs.	13
CRCR-24-CT	Corrugated Top	21" x 24" x 33"	12" x 10 5/8"	3	61 lbs.	13

**Sizes Of Glass Racks Vary*

ADVANCE TABCO®
SMART FABRICATION™
www.advancetabco.com

Customer Service Available To Assist You 1-800-645-3166 8:30 am - 7:00 pm E.S.T.

For Orders & Customer Service:
Email: customer@advancetabco.com or **Fax:** 631-242-6900

For Smart Fabrication™ Quotes:
Email: smartfab@advancetabco.com or **Fax:** 631-586-2933

DIMENSIONS and SPECIFICATIONS

TOL Overall: ± .500” Interior: ± .250”

ALL DIMENSIONS ARE TYPICAL

CRCR-24

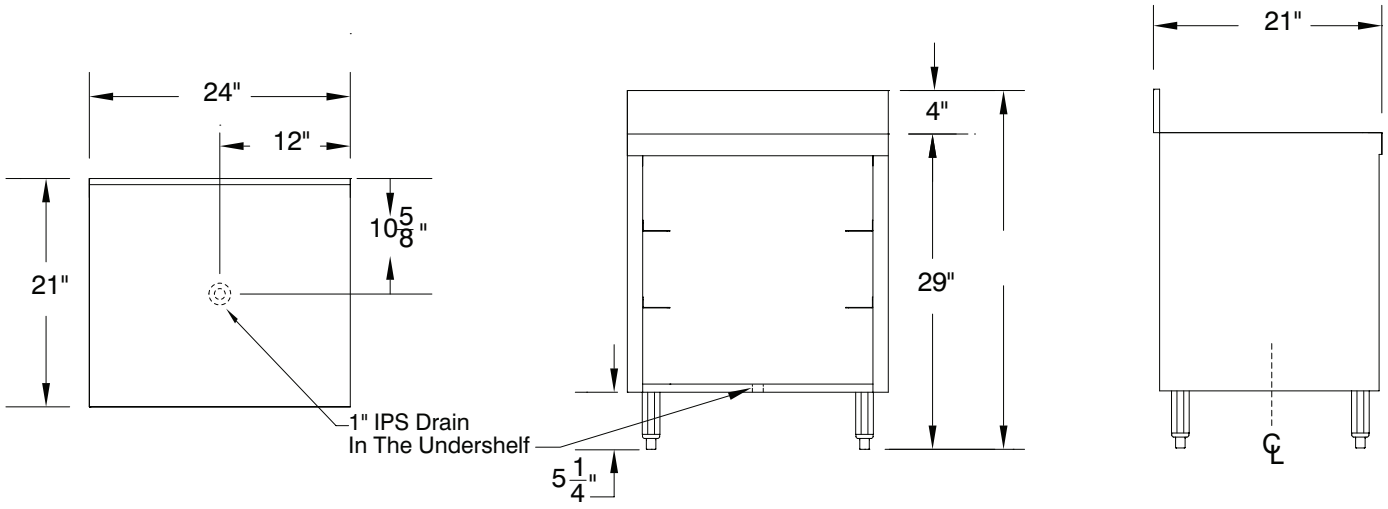

CRCR-24-CT

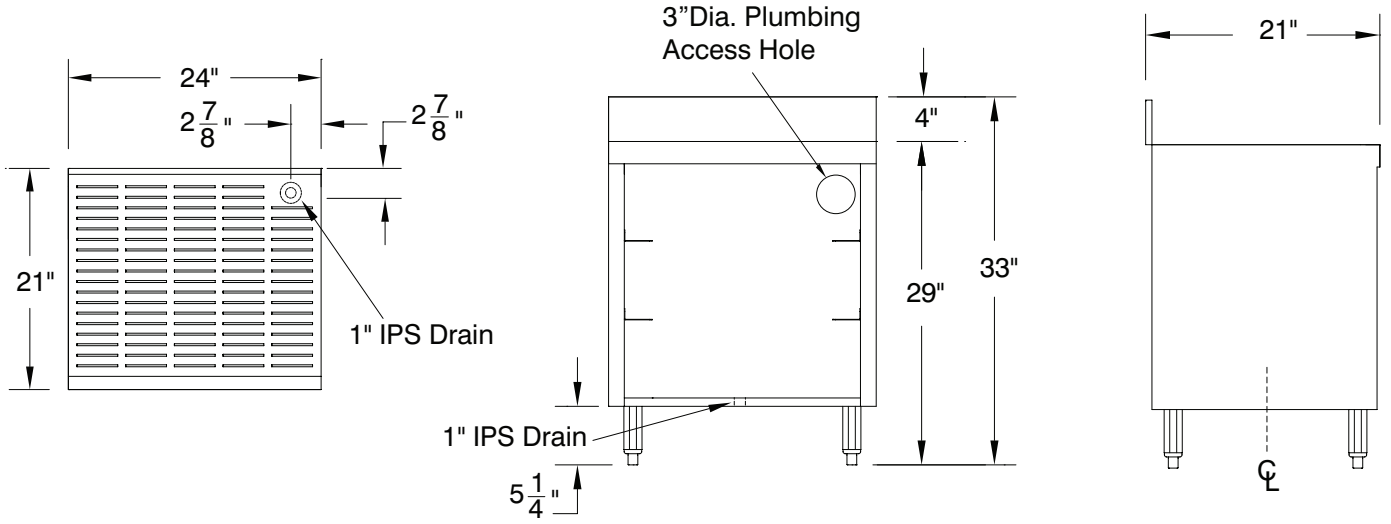

ADVANCE TABCO

SMART FABRICATION™

325 Wireless Boulevard, Hauppauge, NY 11788

ADVANCE TABCO is constantly engaged in a program of improving our products. Therefore, we reserve the right to change specifications without prior notice.

© ADVANCE TABCO, OCTOBER 2026