Two Compartment - Double Drainboard

Stainless Steel Compartment Sinks

Use your smart phone to scan the above QR code to visit our website: www.bk-resources.com

Certifications:



Faucet Sold Seperately

Features:

- 1/4" Pitched Drainboards To Ensure Proper Drainage
- 1 1/2" Rounded Front and Side Edges
- Accommodates 8" On Center Faucets
- Drains Included
- 10" Backsplash
- S/S Basket Drain

Material:

- T-304 16 ga. Stainless Steel Deck & Bowls
- Stainless Steel Legs
- Stainless Steel End Bracing
- Adjustable Stainless Steel over Plastic Bullet Feet

Options:

- Pre-Rinse Units & Faucets
- Lever Drains
- Upgraded Bullet Feet
- Slant Rack Shelf (BK-SSH)
- End Splash (BKS-RES)

Part Number	Unit Size (l x w)	Bowl Dim. (l x w x d)	Sets of Faucet Holes	Drainboard Size	Legs	Product Weight (lbs)
BKS6-2-1620-14-18TS	71 1/4" x 25 1/2"	16" x 20" x 14"	1	(2) - 18"	Stainless Steel w/ End Bracing	87.00
BKS6-2-18-14-18TS	75 1/4" x 23 1/2"	18" x 18" x 14"	1	(2) - 18"	Stainless Steel w/ End Bracing	88.00
BKS6-2-24-14-24TS	99 1/4" x 29 1/2"	24" x 24" x 14"	1	(2) - 24"	Stainless Steel w/ End Bracing	115.00

PRODUCT DATA SHEET

© BKResources September 2026

Two Compartment - Double Drainboard

Stainless Steel Compartment Sinks

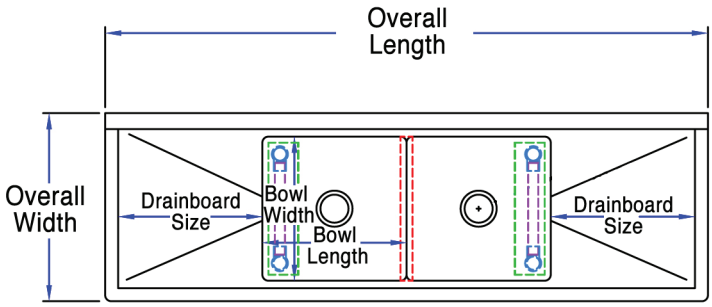

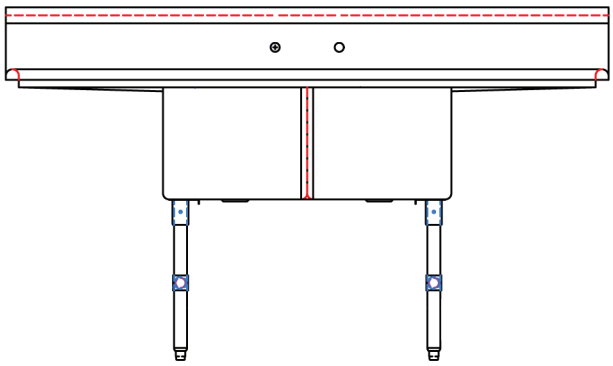

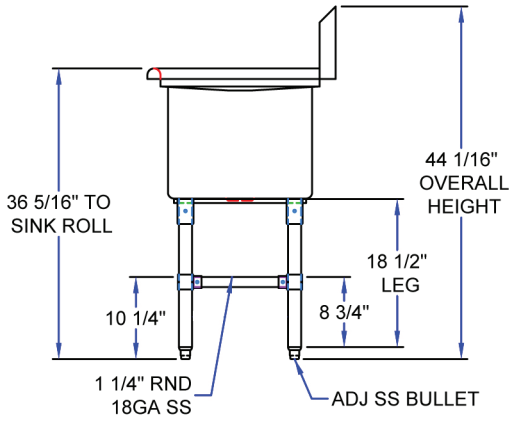

PRODUCT DATA SHEET