ADVANCE TABCO
SMART FABRICATION™

SVU
SPECIAL VALUE UNITS

STAINLESS STEEL

ECONOMY HAND SINKS

7-PS-EC, 7-PS-70-EC & 7-PS-71-EC

Conforms To NSF 61/9 Lead Free Requirements

Item #: _____ **Qty #:** _____

Model #: _____

Project #: _____



7-PS-EC



7-PS-70-EC



7-PS-71-EC

FEATURES:

Deep Drawn sink bowl design.

Sink bowl is 10" x 14" x 5".

Sink bowl has a large liberal radii with a minimum dimension of 2" and are rectangular in design for increased capacity.

Stainless steel 1-1/2" basket drain. 1-1/2" IPS.

7-PS-EC - 4" O.C. economy splash mounted gooseneck faucet, chrome plated & furnished with aerator.

NOTE: This faucet is AB1953 Lead Free Compliant.

7-PS-70-EC - Faucet not included. Two holes punched 4" O.C

7-PS-71-EC - Faucet not included. Single square hole punched.

CONSTRUCTION:

All TIG welded.

Welded areas blended to match adjacent surfaces and to a satin finish.

Die formed Countertop Edge with a No-Drip offset.

MATERIAL:

Heavy gauge type 304 series stainless steel.

Wall mounting bracket is Galvanized and of offset design.

All fittings are brass / chrome plated unless otherwise indicated

MECHANICAL:

Faucet supply is 1/2" IPS male thread hot and cold.

Faucet Flow Rate: 1.0 GPM/3.8 LPM aerator. 60 PSI.

OPTIONAL:

K-59-EC-OMIT - omit faucet on 7-PS-EC sink

⚠ WARNING:

Equipment that includes a faucet may expose you to chemicals, including lead, that are known to the State of California to cause cancer or birth defects or other reproductive harm. For more Info.,visit www.p65warnings.ca.gov.

DIMENSIONS and SPECIFICATIONS

TOL ± .500” **FITTINGS SUPPLIED AS SHOWN** **ALL DIMENSIONS ARE TYPICAL**

7-PS-EC

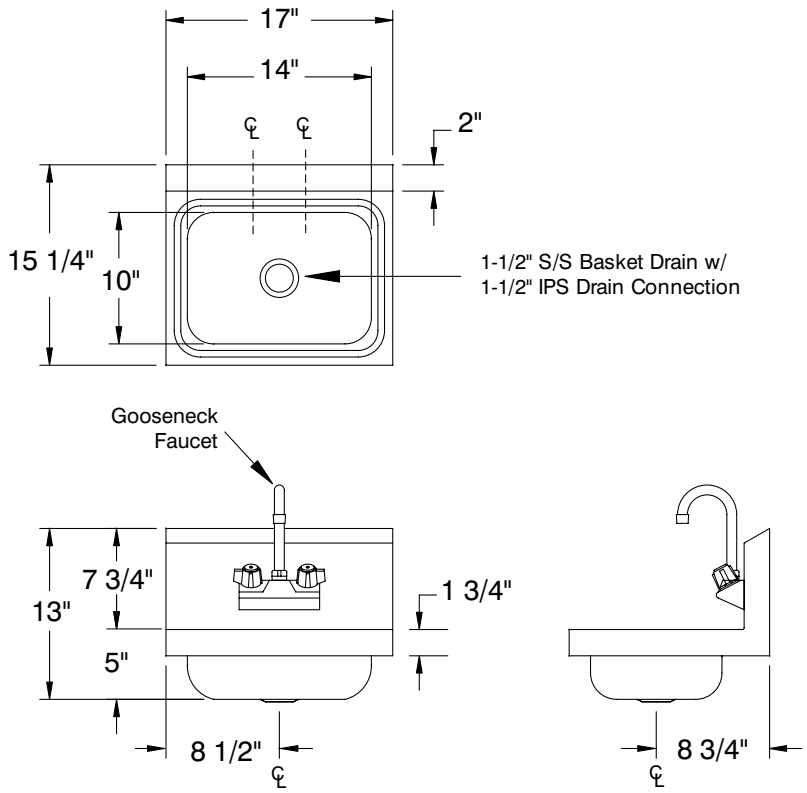

Approx. Ship Wt. 13 lbs.

7-PS-70-EC

7-PS-71-EC Same As 7-PS-70-EC with Single Hole Cutout

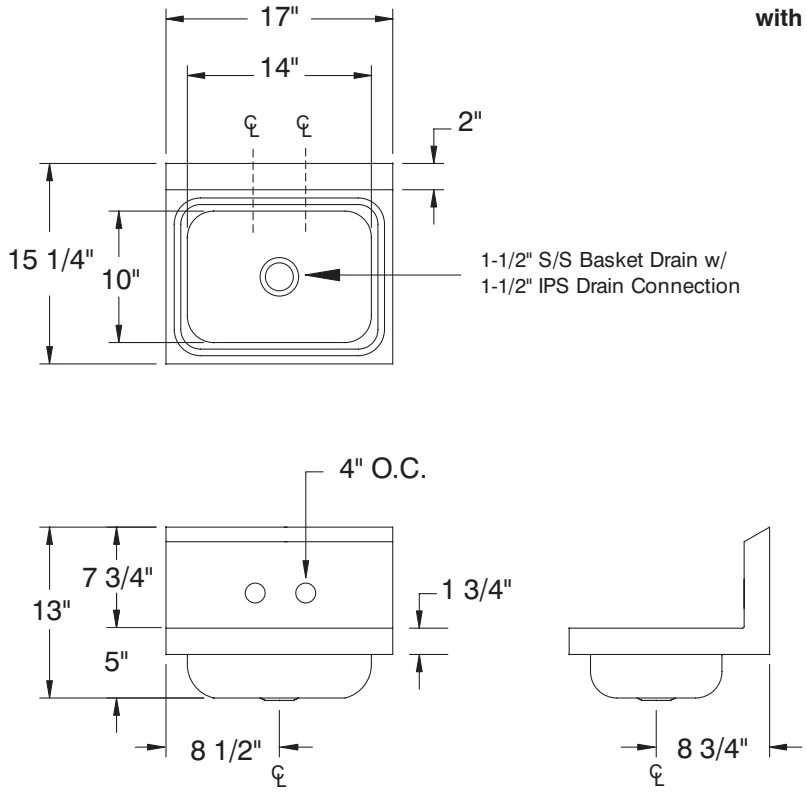

Approx. Ship Wt. 13 lbs.

ADVANCE TABCO is constantly engaged in a program of improving our products. Therefore, we reserve the right to change specifications without prior notice.

© ADVANCE TABCO, OCTOBER 2026