Expanding Stem Casters

1-5/8" Stem Work Table Caster with Polyurethane Wheel

Certifications:

NSF

Features:

- Fits Standard 1-5/8"Tubing by Expanding the Stem Creating a Secure Fit
- Double Ball Bearing Raceway for Long Wear and Added Strength
- With or Without Top Lock Brake
- Raceway Dust Cover

TLB version
(Top Lock Brake)

3SBR

4SBR

5SBR

Material:

- Polyurethane Wheel Resistant to Acids & Caustics
- Temperature Range -45° to 180°F
- Nylon Bearing Sleeve
- Polyurethane Wheel

Part Number	Brake	Exposed Height	Wheel Size	Capacity
3SBR-RA-PLY	-	4.125"	3"	300 LBS
3SBR-RA-PLY-TLB	TLB	4.125"	3"	300 LBS
4SBR-RA-PLY	-	5"	4"	300 LBS
4SBR-RA-PLY-TLB	TLB	5"	4"	300 LBS
5SBR-RA-PLY	-	6"	5"	300 LBS
5SBR-RA-PLY-TLB	TLB	6"	5"	300 LBS

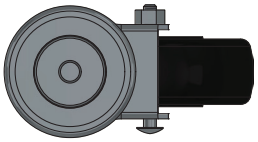

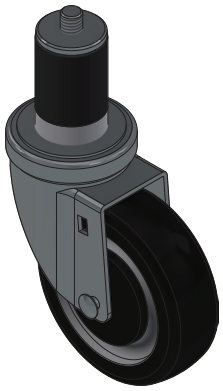

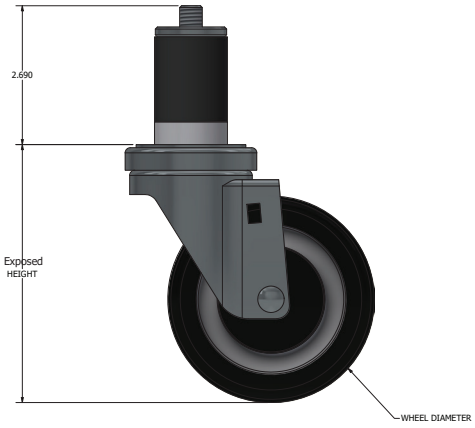

© BK Resources August 2026

PRODUCT DATA SHEET

BK RESOURCES