Oasis

Refrigerated Self-Service End Cap

Structural Concepts®
DELIVERING FRESH. ALWAYS.™

- **FSE660R** 73-3/8"L x 50-3/8"D x 60-5/8"H



Included

- Breeze self-contained refrigeration
- Compressor air intake in one side & out other side. All louvered panels cannot be blocked
- Full end panel w/mirror interior
- LED 4000K top light(s)
- One year parts & labor; 5 year compressor warranty
- Price tag molding (matches interior color)
- Removable deck pans provide complete access to evaporator coil & refrigeration connections
- Warmest average product temperature of 40°F or less

Specify	Standard Features	Additional Options
EXTERIOR COLOR	• Powder coated Black Texture	• Laminate (stock/non-stock colors) • Stainless steel
INTERIOR COLOR	• Powder coated Silversan Black	• Stainless steel
LOWER FRONT PANEL COLOR	• Powder coated Black Texture	• Stainless steel (must choose stainless exterior)
BASE SUPPORT	• Casters w/ levelers (self-cont.)	• Levelers (remote)
SHELVING	• Non-adjustable metal shelves, non-lighted	• Non-adjustable metal shelves, lighted (LED 4000K)
ELECTRICAL CONNECTION	• 6' Straight blade power cord (self-cont.)	• 6' Locking power cord (self-cont.) • Electrical leads (remote)
REFRIGERATION	• Breeze self-contained refrigeration	[1] • Remote w/thermostat, solenoid & TXV
MISCELLANEOUS		• Second year parts & labor warranty (excludes compressor)

Option Notes: 1 - Read important notes for remote options

Oasis

Refrigerated Self-Service End Cap

Structural Concepts
DELIVERING FRESH. ALWAYS.™

Intended Environment:	Type I - Designed to operate in ambient conditions of 75°F with 55% relative humidity unless noted otherwise in system information below.	
Zone	**Intended Product To Be Displayed**	**Warmest Avg Prod Temp ° F**
1	Packaged refrigerated products-Prechilled to Warmest Avg Prod Temp.	40

PLAN VIEW

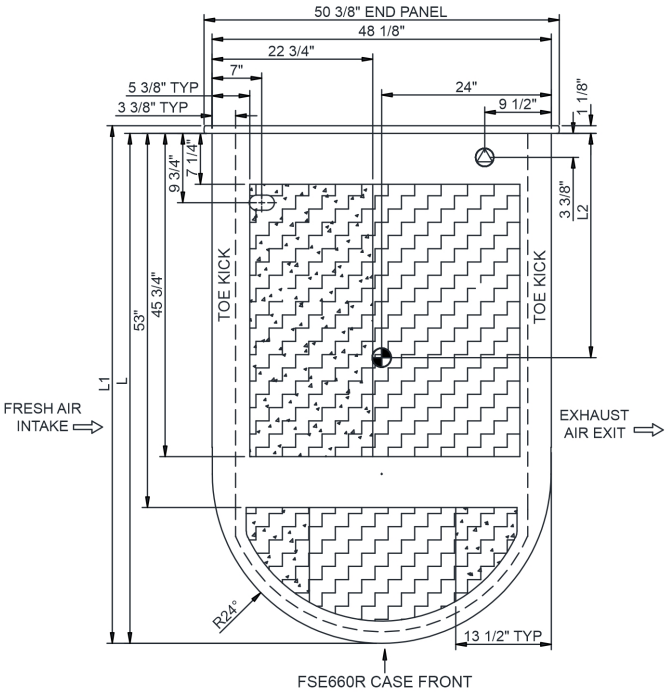

SIDE VIEW

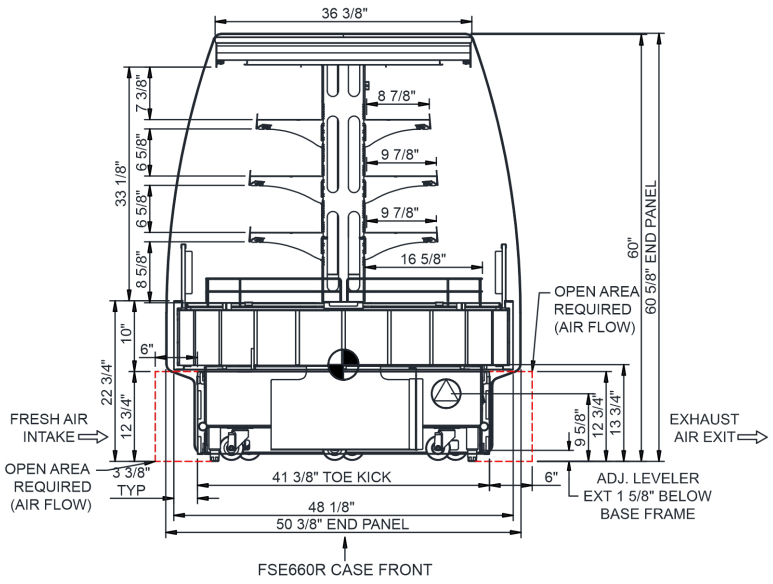

NOTE: ALL DIMENSIONS APPROXIMATE

ELECTRICAL JUNCTION BOX (SUPPLIED WITH 6" LEADS OR POWER CORD).
LOCATION OF DRAIN TUBE FOR REMOTE REF. ONLY (SUPPLIED WITH ¾" OR 1½" PVC TUBE).
REFRIGERATION LINE CONNECTION.
REMOTE FLOOR SINK & UTILITIES ACCESS AREA.
SELF-CONTAINED CASE SERVICE ACCESS AREA.
DRY CASE SERVICE ACCESS AREA.

Model Technical Specifications

Model	L"	L1"	L2"	System Circuit Volts			Phs	Freq	Amps ***	Watts	Wires	NEMA Plug	SST	Conv. Rack BTUH	Para. Rack BTUH	Est Wt
FSE660R	N/A	73.38	.00	Remote (DX - A2L)	Circuit #1	110-120	1	50-60	5.19	264	2+G	Leads Single	20.00	10627	9840	1,550
				Remote (DX)	Circuit #1	110-120	1	50-60	4.49	264	2+G	Leads Single	20.00	10627	9840	
				Self-Contained (R290)	Circuit #1	208-240	1	50-60	23.30	4,670	2+G	6-30P or L6-30P	N/A	N/A	N/A	

*** Does not include electric defrost on freezer models.

Regulatory Approvals:	
All Models	Accordance with AHRI Std 1200 ETL Listed to UL 60335-2-89 ETL Sanitation to NSF/ANSI 7

In Accordance with AHRI Std 1200

DOE 2017 Energy Efficiency Compliant

Important Notes:

1) REMOTE REFRIGERATION NOTE: Condensing unit not included, floor drain required.
2) ELECTRICAL NOTE: If GFCI is required, a GFCI breaker MUST be used in lieu of a GFCI receptacle
3) Compressor air side intake and side discharge
4) 50" minimum door entry clearance required (without shipping skid).
5) Performance issues (product temperatures, water on floor, etc.) caused by adverse conditions are not covered by warranty.
6) Keep unit at least 15' from exterior doors, overhead HVAC vents, or any air curtain disruption.
7) End panels must be tightly joined or kept at least 6" away from any structure to prevent condensation.
8) Do not expose unit to direct sunlight or any heat source (ovens, fryers, etc.).

⚠ **WARNING:** This product can expose you to chemicals, including Urethane (Ethyl Carbamate), which are known to the State of California to cause cancer and birth defects or other reproductive harm. For more information go to www.P65Warnings.ca.gov.

Placement of Case

Consider where the display case will be positioned relative to walls, ceilings, HVAC vents, windows, and other equipment discharging warm air.

The 5′ - 10′ - 15′ Rule

Stay 5′ away from an exterior window

Direct sunlight increases the heat load on the front of the display resulting in the refrigeration system having to work harder and possible condensation on the case.

Remain 10′ away from HVAC ceiling vents

Air blowing on the front of the display interrupts the air curtain and causes product temperatures to increase.

Minimum 4″ clearance to walls & ceilings.
Refer to spec sheets & design guide for further information.

With service display cases that have a glass front, air blowing on the front glass causes condensation to develop.

Position the display 15′ away from exterior doors

Air drafts from the front exterior doors interrupt the air curtain, allowing warm air to penetrate the inside of the display, affecting product temperature.

