Expanding Stem Stainless Steel Casters

1-5/8" Stem Work Table Caster with Polyurethane Wheel

Certifications:

NSF

Features:

- Fits Standard 1-5/8" Tubing by Expanding the Stem Creating a Secure Fit
- Stainless Steel
- Double Ball Bearing Raceway for Long Wear and Added Strength
- With or Without Top Lock Brake
- Raceway Dust Cover

Material:

- Temperature Range -45° to 180°F
- Resistant to Acids and Caustics
- Nylon Bearing Sleeve
- Polyurethane Wheel

TLB version
(Top Lock Brake)

5SS-RA-PLY

Part Number	Brake	Exposed Height	Wheel Size	Capacity
5SS-RA-PLY	-	6"	5"	300 LBS
5SS-RA-PLY-TLB	TLB	6"	5"	300 LBS

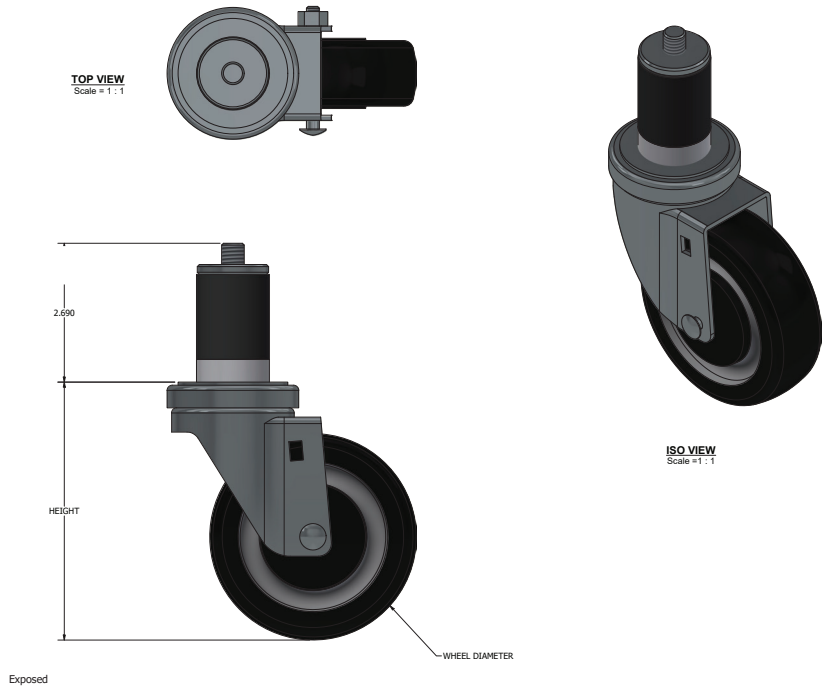

PRODUCT DATA SHEET

BK RESOURCES

© BK Resources August 2026