Expanding Stem Stainless Steel Casters

1″ Stem Work Table Caster with Hard Rubber Wheel

Certifications:

NSF

Features:

- Fits Standard 1″ Tubing by Expanding the Stem Creating a Secure Fit
- Stainless Steel
- Double Ball Bearing Raceway for Long Wear and Added Strength
- With or Without Top Lock Brake
- Raceway Dust Cover

Material:

- Temperature Range -40° to 160°F
- Nylon Bearing Sleeve
- High Impact Molded Rubber Wheel

TLB version
(Top Lock Brake)

5SS-1RA-HR

Part Number	Brake	Exposed Height	Wheel Size	Capacity
5SS-1RA-HR	-	6″	5″	300 LBS
5SS-1RA-HR-TLB	TLB	6″	5″	300 LBS

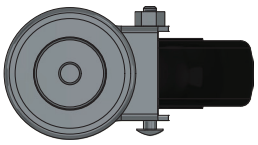

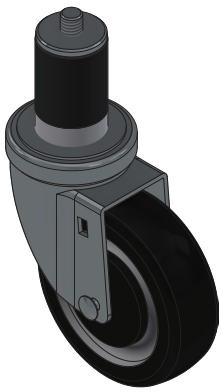

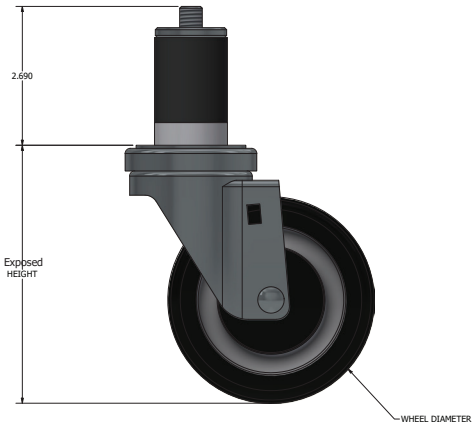

PRODUCT DATA SHEET

BK RESOURCES

© BK Resources August 2026