BLODGETT®

# DFG-100-ES

## Full-Size, Standard Depth Dual Flow Gas Convection Oven



*Shown with optional casters*

Project _____

Item No. _____

Quantity _____

DFG-100-ES

Standard depth baking compartment - accepts five 18" x 26" standard full-size baking pans in left-to-right positions.

All data is shown per oven section, unless otherwise indicated.

*Refer to operator manual specification chart for listed model names.*

## EXTERIOR CONSTRUCTION

- Full angle-iron frame
- Stainless steel front, top, and sides
- Dual pane thermal glass windows sealed in stainless steel door frames
- Ergonomically friendly, curved aluminum door handle with simultaneous door operation
- Triple-mounted pressure lock door design with turnbuckle assembly
- Ball bearing slide out front control panel for easy cleaning
- 1" solid block plus 1" mineral fiber insulation for a total of 2" of insulation

## INTERIOR CONSTRUCTION

- Double-sided porcelainized baking compartment liner (16 gauge)
- Stainless steel combustion chamber
- Single inlet blower wheel
- Five chrome-plated racks, eleven rack positions with a minimum of 1-5/8" (41mm) spacing
- Interior halogen lights

## OPERATION

- Direct fired gas system
- Electronic spark ignition control system
- Removable inshot burners
- Internal pressure regulator
- Manual gas service cut-off switch located on the front of the control panel
- Solid state thermostat with temperature control range of 200°F (93°C) to 500°F (260°C)
- Two speed fan motor
- 3/4 horsepower blower motor with automatic thermal overload protection
- Control area cooling fan

## STANDARD FEATURES

- Artisan Touchscreen Control with meat probe allows for Manual Cooking, Recipe Cooking, Cook and Hold, Core Probe Cooking, Fan Delay, and Fan Pulse.
- 25" (635mm) adjustable stainless steel legs (for single units)
- 6" (152mm) adjustable stainless steel legs (for double sections)
- Three year parts and two year labor warranty
- Five year limited oven door warranty*

** For all international markets, contact your local distributor.*

NOTE: The company reserves the right to make substitutions of components without prior notice

## OPTIONS AND ACCESSORIES

(AT ADDITIONAL CHARGE)

- **Legs, casters & stands**
  - ❑ 6" (152mm) seismic legs
  - ❑ 6" (152mm) casters
  - ❑ 4" (102mm) low profile casters (double only)
  - ❑ 25" (635mm) stainless steel stand w/rack guides
  - ❑ 29" (737mm) stainless steel, fully welded open stand with pan supports
- **Controls**
  - ❑ SSI-M - Solid state infinite control w/manual timer
  - ❑ SimpleTouch - NEW touchscreen control with ability to store and group recipes. Includes rack timing, Cook&Hold, Fan Delay, Fan Pulse, and HAACP storage capability
- **Gas hose w/quick disconnect restraining device:**
  - ❑ 48" (1219mm) hose
  - ❑ 36" (914mm) hosexx
- ❑ Stainless steel oven liner
- ❑ Extra oven racks
- ❑ Stainless steel solid back panel
- ❑ Gas manifold (for double sections)
- ❑ Prison package (includes security control panel and stainless steel back)
- ❑ Flue connector
- ❑ Direct vent

## OPTIONS AND ACCESSORIES

(AT NO ADDITIONAL CHARGE)

- ❑ Solid stainless steel doors

www.blodgett.com
42 Allen Martin Drive, Essex Junction, VT 05452
Phone: (802) 658-6600 | Fax: (802) 864-0183

P/N 57924 Rev Q (11/26)

BLODGETT

# DFG-100-ES

APPROVAL/STAMP

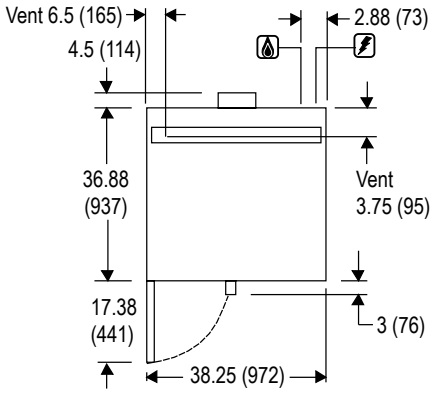


TOP VIEW

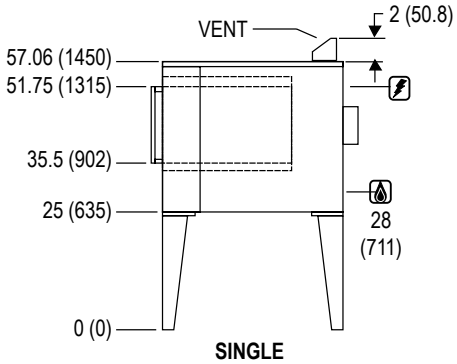


SINGLE

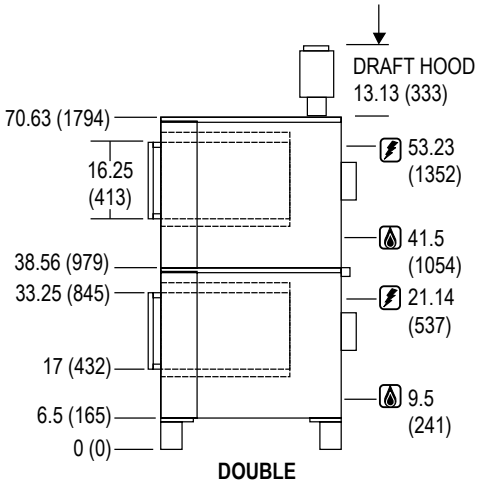


DOUBLE

DIMENSIONS ARE IN INCHES (MM)

SHORT FORM SPECIFICATIONS Provide Blodgett full-size, bakery depth convection oven model DFG-100-ES, (single/double) compartment. Each compartment shall have 16 gauge steel liner and shall accept five 18" x 26" standard full-size bake pans in left-to-right or front-to-back positions. Stainless steel front, top and sides. Doors shall be (solid stainless steel/dual pane thermal glass windows) with single curved aluminum door handle and simultaneous operation. Unit shall be gas heated with electronic spark ignition and shall cook by means of a direct fired system with a gas shutoff switch on the front of the control panel. Air in baking chamber distributed by single inlet blower wheel powered by a two-speed, 1/2 HP motor with thermal overload protection. Each chamber shall be fitted with two halogen lamps, and five chrome-plated removable racks. Control panel shall be recessed with Artisan Touchscreen Control allowing manual and recipe cooking, cook and hold, probe cooking, fan delay, and fan pulse. Provide three years parts, two year labor and five year door warranty. Provide options and accessories as indicated.

## DIMENSIONS

| | |
|---|---|
| **Floor space** | 38-1/4" (972mm) W x 36-7/8" (937mm) D |
| **Interior** | 29" (737mm) W x 20" (508mm) H x 24-1/4" (616mm) D |
| **If oven is on casters** | |
| Single | Add 4-1/2" (114mm) to height |
| Double | Height dimensions remain the same |
| Double Low Profile | Subtract 2.5" (64mm) from all height dimensions |

## PRODUCT CLEARANCE

**From combustible and non-combustible construction**

0" (0)mm)

Optional Heat Shield provides 1.25" Air Gap

## MINIMUM ENTRY CLEARANCE

| | |
|---|---|
| **Uncrated** | 32-1/16" (814mm) |
| **Crated** | 37-1/2" (953mm) |

## SHIPPING INFORMATION

**Approx. Weight**

| | |
|---|---|
| Single | 600 lbs. (273 kg) |
| Double | 1295 lbs. (589 kg) |

**Crate Size**

37-1/2" (952mm) x 43-1/2" (1105mm) x 51-3/4" (1315mm)
(2 crates required for double)

## GAS SUPPLY (per section)

3/4" NPT

**Inlet Pressure**

| | |
|---|---|
| Natural Gas | 7.0" W.C. min. – 10.5" W.C. max. |
| Propane | 11.0" W.C. min. – 13.0" W.C. max. |

**Manifold Pressure**

| | |
|---|---|
| Natural Gas | 3.5" W.C. |
| Propane | 10" W.C. |

## MAXIMUM INPUT

45,000 BTU/hr (13.2 Kw) per oven section

## POWER SUPPLY

115 VAC, 1 phase, 8 Amp, 60 Hz., 2-wire with ground, 3/4 H.P., 2 speed motor, 1120 and 1680 RPM

6' (1.8m) electric cord set furnished on 115 VAC ovens only.

230V CE model, 1 phase, 3 Amp, 50 Hz., 2-wire with ground, 1/2 H.P., 2 speed motor, 1440/930

Note: This oven offers flexibility in installation, it can also be hardwired to accommodate specific installation requirements and local electrical codes. Please consult with a qualified electrician to determine the appropriate installation method.