FORCED AIR MILK COOLERS

Model: MC5NSSD

Natural Refrigerant R-290 Model

58” Forced Air Milk Cooler Dual Access

ENERGY STAR® Qualified Commercial Refrigerator

Stainless steel exterior and interior, heavy-duty stainless steel lid(s), door hinges and latches with reinforced stainless steel floor. **Designed to keep milk cold during serving.**

Options and Accessories

(upcharge and lead times may apply)

Wrap around bumpers	Color laminate
Corner bumpers	Floor foot pedal lock

Consult factory for other model configurations, options and accessories.

Project Name:

Model Specified:

Location:

Item No: **Quantity:**

AIA #: **SIS #:**

Standard Model Features

REFRIGERATION SYSTEM

- Forced air, performance rated refrigeration system
- Natural, environmentally safe, high efficiency R-290 refrigerant[1]
- Built-in, electric condensate evaporator
- Easily serviceable, bottom mounted condensing unit

CABINET ARCHITECTURE

- 2” high density, non-CFC polyurethane foamed-in-place insulation
- Snap in lids and door gaskets
- Non-corrosive, heavy duty, epoxy coated steel wire floor racks
- Cylinder keyed security locks
- 5” diameter swivel plate casters with front locking brakes

MODEL FEATURES

- Electronic controller with digital display & hi-low alarm
- Floor drain
- Unique forced air flow curtain

[1] R-290 refrigerant meets all federal and state regulatory requirements.

Continental® Refrigerator

WARRANTY 7 Year Parts & Labor 7 Year Compressor

APPROVAL:

Model Specifications

DIMENSIONAL DATA

Net Capacity (cubic feet)	24 (680 l)
Crate Capacity (13” x 13” x 11”)	16
Crate Capacity (19” x 13” x 11”)	10
Width, Overall (inches)	58 (1473 mm)
Depth, Overall (inches)	33 (838 mm)
Height, Overall (inches) (including 5” casters)	47 (1194 mm)

REFRIGERANT DATA

Condensing Unit Size (H.P.)	⅓
R-290 Refrigerant Charge (oz)	4.3
Capacity (BTU per hour)*	2540

ELECTRICAL DATA

Voltage (International)	115/60/1 (220/50/1)
Total Amps (International)	5.0 (2.5)
10 ft. Cord/Plug [attached] (International)	Yes (No)

SHIPPING DATA

Weight (pounds)	580 (263 kg)
Height - Crated (inches)	56 (1429 mm)
Width - Crated (inches)	67 (1708 mm)
Depth - Crated (inches)	37 (927 mm)

* Rating @ +25°F evaporator, 90°F ambient
Figures in parentheses reflect metric equivalents rounded to the nearest whole unit.

Equipped with one NEMA-5-15P Plug (varies by country)

Model Plan Views

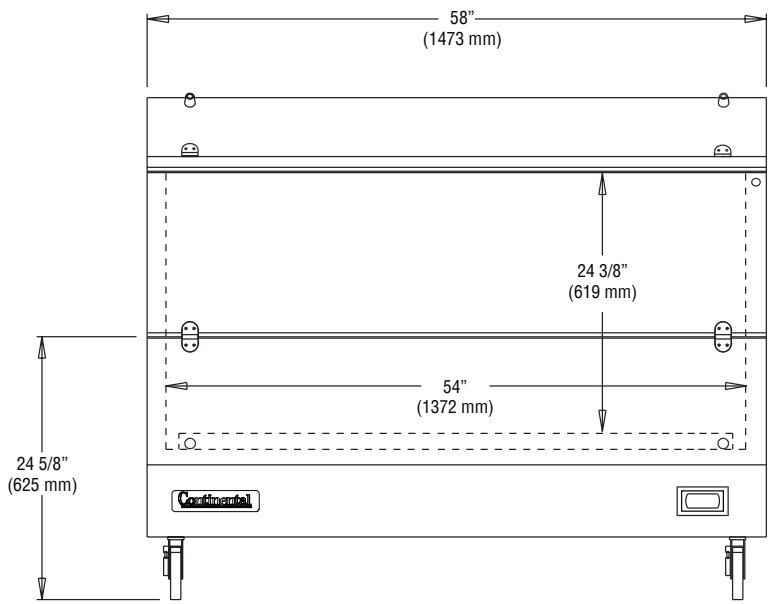

FRONT VIEW

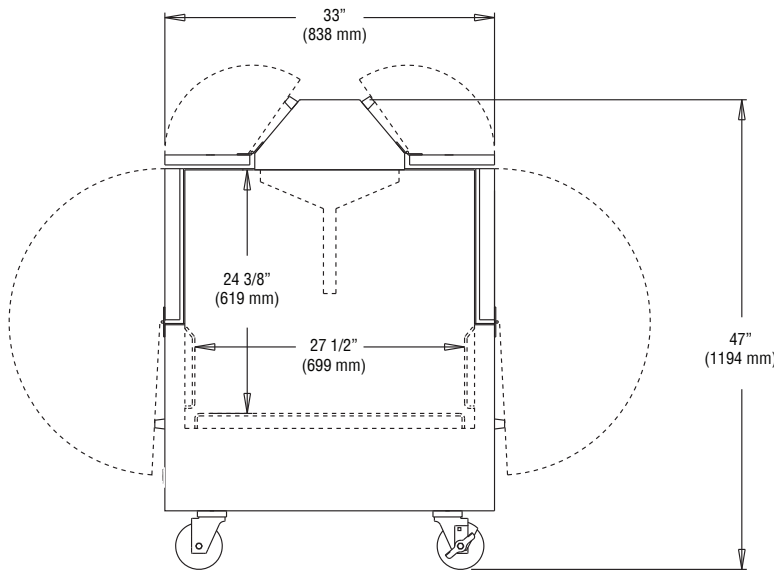

SIDE VIEW

Continental Refrigerator

Toll-Free: 800-523-7138
Phone: 215-244-1400
Fax: 215-244-9579

539 Dunksferry Road
Bensalem, PA 19020
www.continentalrefrigerator.com

Due to our continued efforts in developing innovative products, specifications subject to change without notice.

Intertek

PROUDLY DESIGNED & ASSEMBLED IN THE U.S.A.

© Copyright 2021. Continental Refrigerator.

REVISED: 4/29/26