Manitowoc
FROM PENTAIR WATER SOLUTIONS

INDIGO® NXT

iP0600 Ice Cube Machine - 50 Hz

IYP0600A-251 | IDP0600A-251 | IYP0600W-251



Indigo NXT Series iP0600
Ice machine on D570C bin
Ice machine and bin sold separately.

Ice Machine Electric

230/50/1

Minimum Circuit Ampacity:
Air Cooled: 5.4
Water Cooled: 3.9

Maximum Fuse Size:
Air Cooled: 15 amps
Water Cooled: 15 amps

Instant Power:
Air Cooled: 1242 W
Water Cooled: 897 W

Specifications

BTU per hour:
8,935 (average)
10,915 (peak)

Refrigerant:
R290 CFS Free
Non-ozone depleting
and near zero GWP

Operating Limits:
- Ambient Temperature Range:
  35˚ to 110˚F (1.7˚ to 43.3˚C)
  Water Temperature Range:
  40˚ to 90˚F (4.4˚ to 32.2˚C)
- Potable Water Pressure:
  Min. 20 psi (137.9 kPA)
  Max. 80 psi (551.1 kPA)

Ice Shape



Half Dice:
3/8" x 1⅛" x 7/8"
(0.95 x 2.86 x 2.22 cm)

Cube weight: 5.7 g



Dice:
7/8" x 7/8" x 7/8"
(2.22 x 2.22 x 2.22 cm)

Cube weight: 8.5 g

Designed for operators who know that ice is critical to their business, the Manitowoc Indigo NXT Series Ice Machine provides reliable and consistent performance. Built-in preventative diagnostics and programmable operation help minimize downtime and optimize total cost of ownership.

Sanitation

- Easy Interior Cleaning - Hinged front door swings wide open, providing easy access to food zone. Removable water trough, distribution tube, curtain, water probe and water pump allow for complete, efficient cleaning of the parts. Select components are made with AlphaSan® antimicrobial.
- Low-Maintenance, Durable Exterior - 304 stainless steel provides corrosion resistance.
- Added Protection - Available LuminIce® Growth Inhibitor helps control the growth of bacteria and yeast within the food zone. Indicator on the display provides operational status.

Sustainability & Value

- R290 Natural Refrigerant - Minimize global warming potential and still maintain a high performance with R290 propane refrigerant.
- Ease of Operation - The easyTouch® display takes the guesswork out of owning and operating an ice machine with icon-based touch screen.
- Consistent Output - Acoustical ice sensing probe and Active Sense ensure consistent harvest, even in challenging water conditions and environments.
- Intelligent Diagnostics - Worry-free operation with 24-hour preventative maintenance and diagnostic feedback.
- Cost Savings - Reduce energy costs with programmable Ice production by scheduling during lower rate hours and controlling daily ice volume.
- Overall Lifetime Value - Lower cost of ownership over the life of machine with decreased energy and water consumption as compared to legacy models.

COMMERCIAL WARRANTY *
ICE MAKER 3 YEAR PARTS AND LABOR | EVAPORATOR 5 YEAR | COMPRESSOR 5 YEAR PARTS 3 YEAR LABOR

*This is a limited warranty. For full terms, visit manitowocice.com/service/warranty or call 920-682-0161

iP0600 Ice Cube Machine - 50 Hz

IYP0600A-251 | IDP0600A-251 | IYP0600W-251

iP0600 on D570C Storage Bin

Ⓐ Electrical Entrance (2) Options

Ⓑ 3/8" (0.95 cm) F.P.T.
Water Condenser Inlet
(water-cooled units)

Ⓒ 1/2" (1.27 cm) F.P.T.
Water Condenser Outlet
(water-cooled units)

Ⓓ 1/2" (1.27 cm)
Auxiliary Base Drain Socket

Ⓔ 3/8" (0.95 cm) F.P.T.
Ice Making Water Inlet

Ⓕ 1/2" (1.27 cm) F.P.T.
Ice Making Water Drain

Ⓖ 3/4" (1.91 cm)
Bin Drain

Installation Note
Minimum installation clearance:
Top/side: 8" (20.3 cm)
Back is 5" (12.7 cm)

Installation location must be indoors.

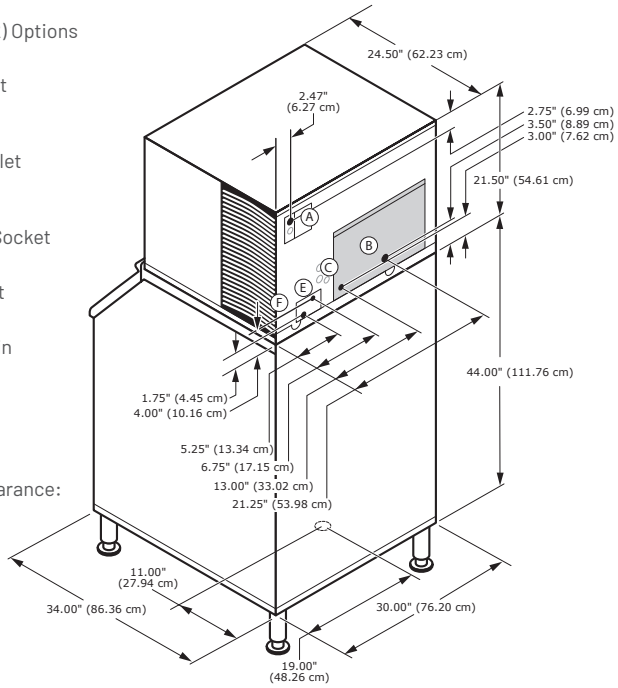

Space-Saving Design



	iP0600 D400C	iP0600 D570C
Height	59.50" 151.13 cm	71.5" 181.61 cm
Width	30.0" 76.20 cm	30.0" 76.20 cm
Depth	34.0" 86.36 cm	34.0" 86.36 cm
Bin Storage	365 lbs. 165 kgs.	532 lbs. 241 kgs.

Height includes adjustable bin legs 6.00" to 8.00", (15.24 to 20.32 cm) set at 6.00" (15.24 cm).

Bin capacity is based on 90% of the volume x 33 lbs/ft³ average density of ice.

Ice machine and bin sold separately.

Specifications

	Model	Ice Shape	Refrigerant Charge	Shipping Weight Kgs	Ice Production 24 Hours		Power Usage kWh per 100 lbs. (45.4 kgs.) of Ice	Potable Water Usage per 100 lbs. (45.4 kgs.) of Ice
					70°Air/ 50°F Water (21°Air /10°C Water)	90°Air/ 70°F Water (32°Air / 21°C Water)	@ 90°Air / 70°F Water	(32°Air / 21°C Water)
Air Cooled	IYP0600A-251	Half Dice	226 g	76.5	632 lbs. (287 kgs.)	546 lbs. (248 kgs.)	4.18	14.78 Gal. (55.95 L)
Air Cooled	IDP0600A-251	Dice	226 g	76.5	641 lbs. (291 kgs.)	545 lbs. (247 kgs.)	4.17	14.38 Gal. (54.43 L)
Water Cooled	IYP0600W-251	Half Dice	330 g	79.5	672 lbs. (305 kgs.)	600 lbs. (272 kgs.)	3.27	15.09 Gal. (57.08 L)
	Water cooled condenser water usage per 100 lbs (45.4 kgs) of ice: IYP0600W-251 95.6 gal (361.9 L).							

Order separately: Ice storage bin for all units.
R290 is a refrigerant grade propane which is naturally occurring with no ozone depletion potential and extremely low global warming potential.

Accessories

LuminIce® II Virus and Bacteria Inhibitor
controls viruses and bacteria in the ice machine.



External Scoop Holder
protect the ice scoop with the NSF approved versatile scoop holder.



Arctic Pure® Plus Water Filters
reduce sediments and chlorine contaminants down to 0.5 microns. Use with a pre-filter is recommended.



Manitowoc Ice reserves the right to make changes to the design or specifications without prior notice.

Manitowoc
FROM PENTAIR WATER SOLUTIONS

2110 South 26th Street | Manitowoc, WI 54220 | United States
+1.920.682.0161 | +1.920.683.7589 Fax | manitowocice.com

All indicated Pentair trademarks and logos are property of Pentair. Third party registered and unregistered trademarks and logos are the property of their respective owners.
©2025 Pentair. All Rights Reserved.