STAINLESS STEEL

DROP-IN SINKS

Two Compartments - FOR GENERAL PURPOSE USE

NOTE: Multi-Compartment Drop-In Sinks ARE NSF Approved when used in Mobile Food Carts and Kiosks only.

Item #: _____ Qty #: _____

Model #: _____

Project #: _____

FEATURES:

One piece seamless **Deep Drawn** sink bowl design.

All sink bowls have a large liberal radii with a minimum dimension of 2" and are rectangular in design for increased capacity.

Self-Rim Design. Mounting clips provided fit counters 7/8" to 2" thick. (Quantity supplied varies based on drop in sink ordered).

Includes 4" O.C. **K-50** faucet & basket drain.



DI-2-10

CONSTRUCTION:

Bowls fabricated from one sheet of stainless steel.

All bowls are Sound Deadened.

Units feature Advance Tabco's **Smart Finish™**.



DI-2-2012

MECHANICAL:

Faucet supply is 1/2" IPS male thread.

Deck mounted faucets are furnished with aerator.

Faucet Flow Rate: 1.0 GPM/3.8 LPM aerator. 60 PSI.

MATERIAL:

18 gauge type 304 series stainless steel.

Faucets are brass-nickel plated.

Stainless Steel 1-1/2" IPS basket drain.



DI-2-1410



STANDARD MOUNTING CLIPS

For countertops over 7/8" and up to 2" thick.

Replacement # K-28 (Per Sink)

Available Faucets & Accessories	Model #	Qty
Deck Mounted 8" Swing Spout. 4" O.C.	**K-50**	
Deck Mounted 12" Swing Spout. 4" O.C.	**K-53**	
Deck Mounted 8 1/2" Gooseneck. 4" O.C.	**K-55**	
Deck Mounted Swing w/Spray. 8" O.C.*	**K-58**	
Mounting Clips (Bag of 4).	**K-28**	

*REQUIRES **K-472** FAUCET HOLE REVISION



DI-2-208

⚠ **WARNING:** Faucets on this page may expose you to chemicals, including lead, that are known to the State of California to cause cancer or birth defects or other reproductive harm. For more Info.,visit www.p65warnings.ca.gov.

ADVANCE TABCO SMART FABRICATION™
www.advancetabco.com

Customer Service Available To Assist You 1-800-645-3166 8:30 am - 7:00 pm E.S.T.

For Orders & Customer Service:
Email: customer@advancetabco.com or **Fax:** 631-242-6900

For Smart Fabrication™ Quotes:
Email: smartfab@advancetabco.com or **Fax:** 631-586-2933

DIMENSIONS and SPECIFICATIONS

TOL ± .125” **Supplied with K-50 Faucet & K-6 Basket Drain** ALL DIMENSIONS ARE TYPICAL

DI-2-10

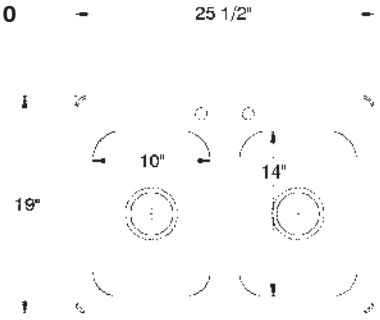

Cut-Out Size
24 3/4” X 18 1/4”
1 1/4” radius corners

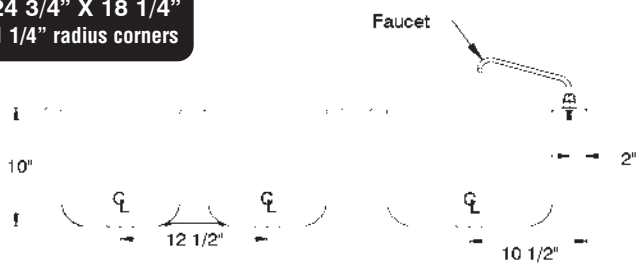

Approx. Ship Wt. 26 lbs.

DI-2-1410

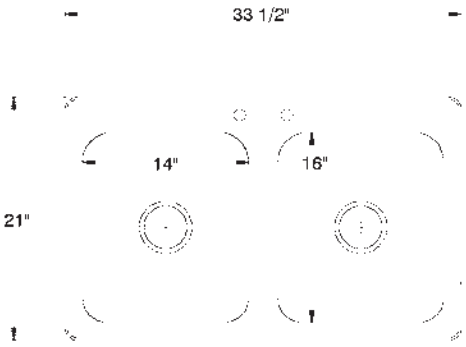

Cut-Out Size
32 3/4” X 20 1/4”
1 1/4” radius corners



Approx. Ship Wt. 35 lbs.

DI-2-208 & DI-2-2012

Cut-Out Size
44 3/4” X 20 1/4”
1 1/4” radius corners

TOP VIEW

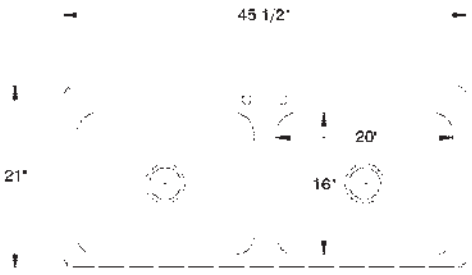



Approx. Ship Wt. 38 lbs.

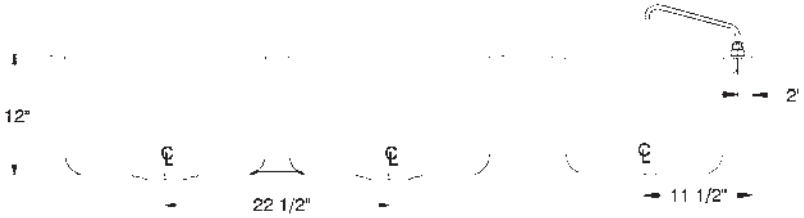

Approx. Ship Wt. 42 lbs.

TYPICAL INSTALLATION

Cut-Out Size = L to R x F to B

Standard Mounting Clips Fit Countertops Over 7/8” & Up To 2” Thick.

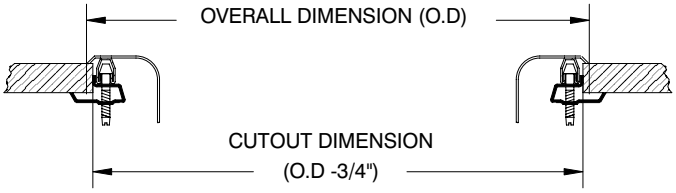

ADVANCE TABCO
SMART FABRICATION™

REF-A 325 Wireless Boulevard, Hauppauge, NY 11788

ADVANCE TABCO is constantly engaged in a program of improving our products. Therefore, we reserve the right to change specifications without prior notice.

© ADVANCE TABCO, OCTOBER 2026