ADVANCE TABCO
SMART FABRICATION™

SVU
SPECIAL VALUE UNITS

STAINLESS STEEL

DROP-IN SINKS
ONE COMPARTMENT
NO DRIP SELF-RIMMED EDGE

NSF



Item #: _____ Qty #: _____
Model #: _____
Project #: _____

DIMENSIONS and SPECIFICATIONS

MODEL#	COMP	OVERALL LxW	BOWL SIZE LxW	DEPTH
DI-1-1515	1	15" x 15"	12-1/4" x 10-1/4"	6"

Length is Left to Right. Width is Front to Back

TOL ± .125" ALL DIMENSIONS ARE TYPICAL

DI-1-1515

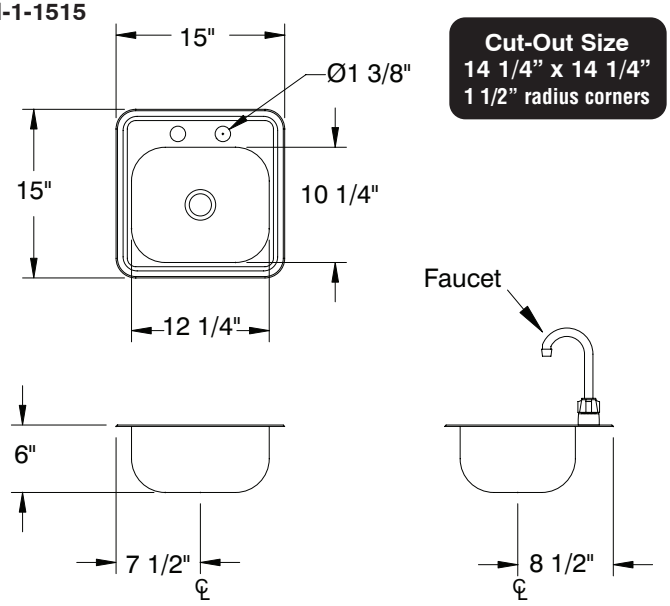

Cut-Out Size
14 1/4" x 14 1/4"
1 1/2" radius corners

Approx. Ship Wt. 11 lbs.

FEATURES:
One piece seamless **Deep Drawn** stainless steel bowl.
Self rimming design & bowl is sound deadened.
Raised, No Drip Self-Rim Edge. Mounting clips provided fit counters 7/8" to 2" thick.
K-52 faucet and drain.

MATERIALS:
Stainless Steel Type 304, 20 Gauge.
Stainless Steel 3-1/2" Basket Drain.
Faucet is brass-nickel plated.

DESIGN:
Unit punched with 1-3/8" dia. faucet holes.

MECHANICAL:
Faucet supply is 1/2" IPS male thread.
Deck mounted faucet is furnished with aerator and 4" O.C.
Faucet Flow Rate: 1.0 GPM/3.8 LPM aerator. 60 PSI.



STANDARD MOUNTING CLIPS
For countertops over 7/8" and up to 2" thick.
Replacement # K-28 (Per Sink)

Available Faucets & Accessories	Model #	Qty
Deck Mounted 3 1/2" Gooseneck. 4" O.C.	**K-52**	
Deck Mtd. X.H.D. 3 1/2" Gooseneck. 4" O.C.	**K-62**	
Mounting Clips (Bag of 4).	**K-28**	

TYPICAL INSTALLATION

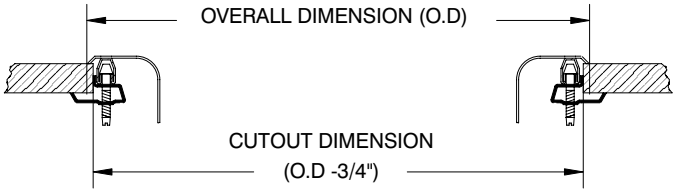

Cut-Out Size = L to R x F to B

Standard Mounting Clips Fit Countertops Over 7/8" & Up To 2" Thick.

⚠ **WARNING:** Faucets on this page may expose you to chemicals, including lead, that are known to the State of California to cause cancer or birth defects or other reproductive harm. For more Info.,visit www.p65warnings.ca.gov.

ADVANCE TABCO
SMART FABRICATION™
www.advancetabco.com

Customer Service Available To Assist You 1-800-645-3166 8:30 am - 7:00 pm E.S.T.

For Orders & Customer Service:
Email: customer@advancetabco.com or **Fax:** 631-242-6900

For Smart Fabrication™ Quotes:
Email: smartfab@advancetabco.com or **Fax:** 631-586-2933

ADVANCE TABCO is constantly engaged in a program of improving our products. Therefore, we reserve the right to change specifications without prior notice. © ADVANCE TABCO, OCT. 2026