UT61e Utensil/pot washer

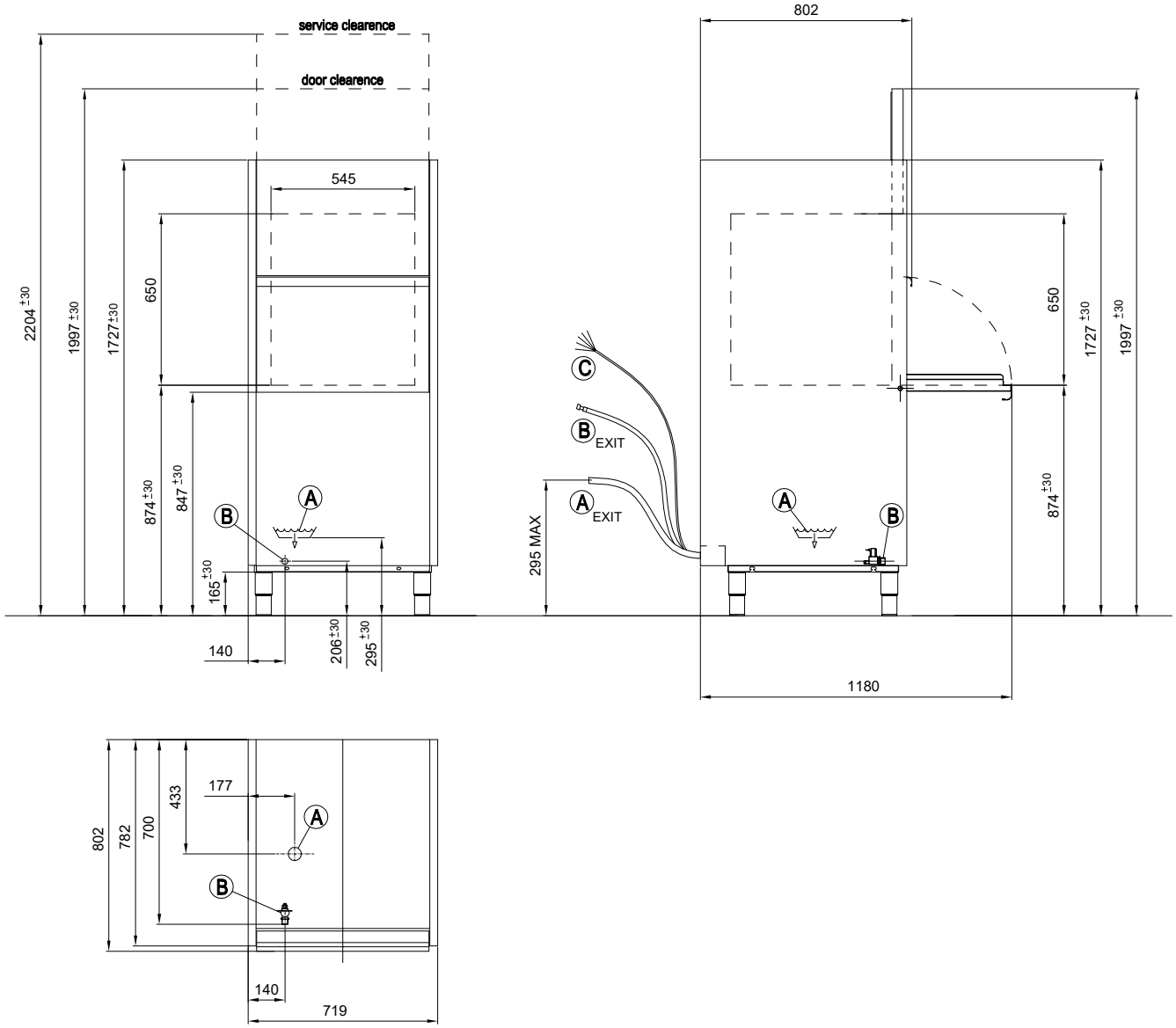

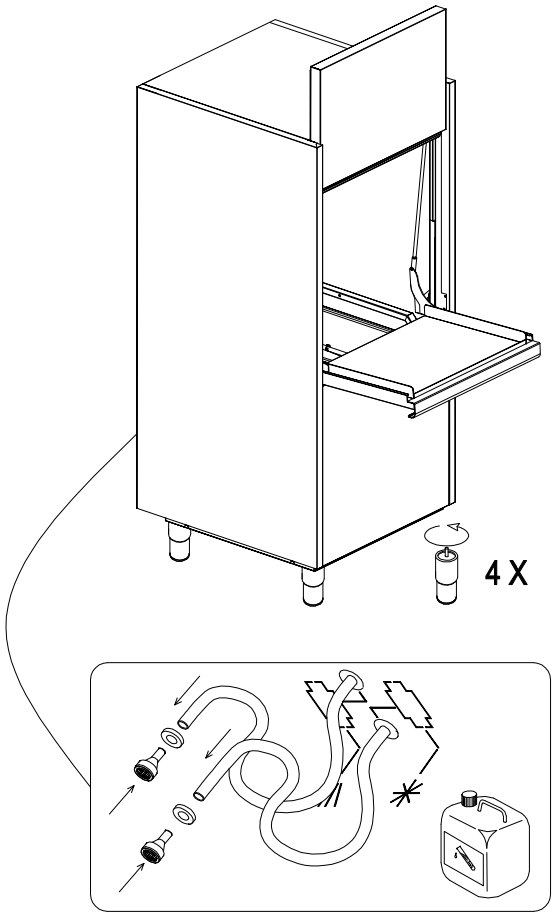

A	∅ 50mm M	A EXIT	∅ 35 mm M
B	G 3/4" M	B EXIT	G 3/4" F
C	Power supply	E	Steam exaust

Installation layout	Utensil washer	LP4	00	
M.PIERI	05.10.2018			
Designed by:	Date:	Denomination :	Code :	Rev. :