XLR8™ Upper Heated Platen

Electric Upper Heated Platen Arm

Project: _____ Location: _____ Item #: _____ Quantity:_____

Short Specification

XLR8™ Heavy duty upper heated platen for mounting on any AccuSteam™ 24" cooking depth griddle. XLR8™ features all stainless-steel construction to maximize strength and longevity. The XLR8™ utilizes proprietary electric heating technology to deliver ±10 degree temperature accuracy and near instant recovery, of set point temperature. Digital controls feature a temperature range from 150°- 440°F. XLR8™ controller also features 2-dual stage timers with automatic timing functionality. Robust single hand lift mechanism with top and bottom detent to ensure positive stops. Adjustable gapping and magnetic Teflon hold down handles. Upper platen coverage dimensions 11.6" wide x 23.6" deep for maximum zone coverage. Mounting bracket required for installation. 208/240V 50/60Hz single phase.

Performance Features

The XLR8™ proprietary electric cooking technology ensures maximum performance no matter the application. With its even temperatures and near instant recovery, the XLR8™ outperforms all the competition with faster cook times, more consistent product quality and improved product safety.

Safety, Sanitation & Environmental

NSF/ANSI 4

MADE IN USA

Standard Control Features

- All stainless-steel construction
- Proprietary electric heating technology provides even heat and near instant recovery
- Single hand lift mechanism with positive top and bottom detents to ensure smooth operation and positive stops
- Temperature Range from 150°- 440°F
- 2-dual stage timers with automatic timing functionality
- Includes 5 non-proprietary Teflon sheets per arm
- Magnetic Teflon hold down handles
- Dual voltage 208/240V 50/60Hz single phase (max 12 amp draw per arm)
- Easy to use gap adjuster
- One Year Parts and Labor Warranty
- Upper platen coverage dimensions are 11.6" wide x 23.6" deep

Required Options

MOUNTING KIT –
XLR8™ mounts to any natural gas or electric AccuSteam™ griddle featuring a 24" depth ("B depth"). Mounting Bracket allows for flexibility of mounting arms every 12" in any configuration..

Mounting Bracket Kit:

- AT2A-7089-1 24" Electric Kit
- AT2A-7170-1 36" Electric Kit
- AT2A-7170-2 48" Electric Kit
- AT2A-7089-4 24" Gas Kit
- AT2A-7170-3 36" Gas Kit
- AT2A-7170-4 48" Gas Kit

STABILIZATION KIT –
Griddle Leg Stabilization required for counter top mounted option.

- AT2A-6429-1 24" Leg Stablilization Kit
- AT2A-6429-2 36" Leg Stablilization Kit
- AT2A-6429-3 48" Leg Stablilization Kit

(1) XLR8 arm shown mounted on a 24" griddle with required leg stabilization kit.

Options & Accessories

- AT0H-5661-5 - Teflon Sheets, 10 Pack

AccuTemp product may be covered by one or more US Patents. See www.accutempip.net

MM5261-2607

XLR8™ Upper Heated Platen

Electric Upper Heated Platen Arm

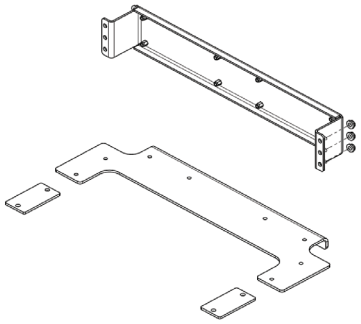

Required mounting bracket illustrated. Available in 2', 3' or 4'. Electric kits come with grease sheild and clips while gas kit comes with flue draft diverter.

XLR8 Upper Heated Platen		
Model #	XLR82401B-00	
Phase	1	
Volts	208 V	240 V
Amps	10 A	11.2 A
Watts	2.1 kW	2.7 kW
Breaker Size	15A	
NEMA Plus (208/240)	L6-30P	
Unit Width (one arm)	11 9/16"	

Notes:

1. Each XLR8™ Arm comes with 6' power cord, separate receptacle needed for each unit.
2. For use on individual branch circuit only.

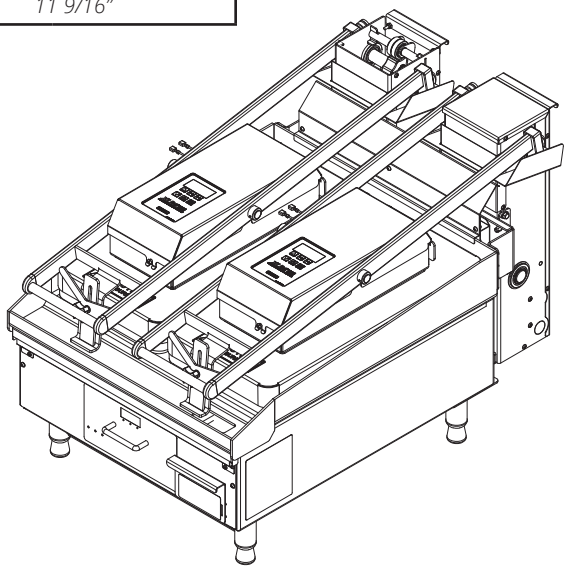

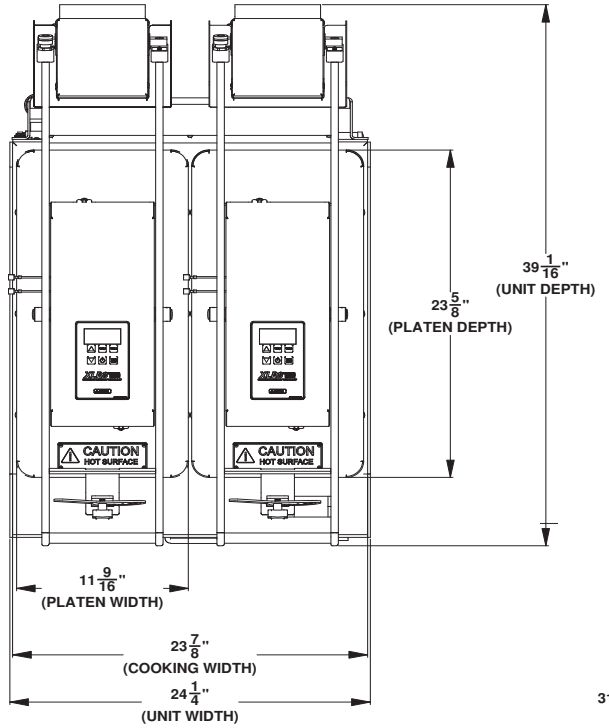

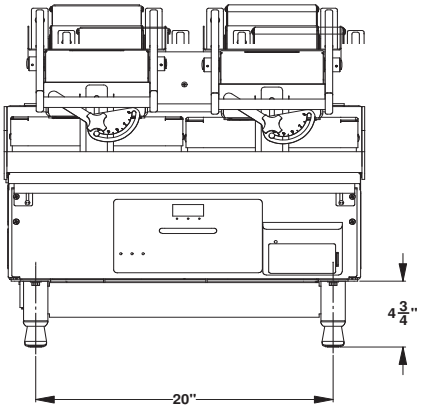

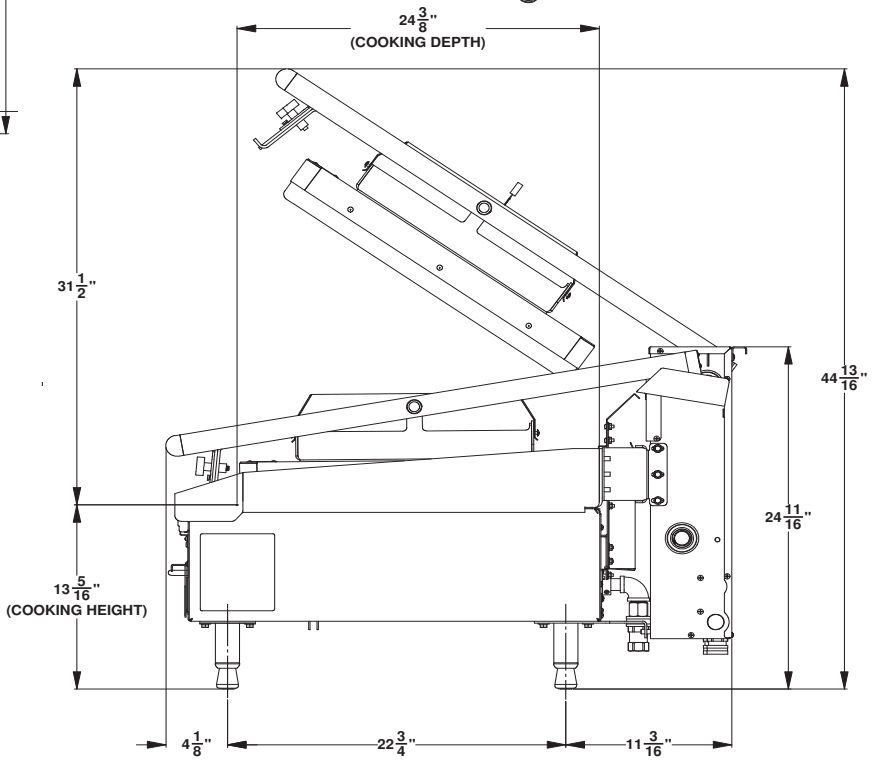

Drawing shown with (2) XLR8 Upper Heated Arms and Required Leg Stabilization Kit.

AccuTemp product may be covered by one or more US Patents. See www.accutempip.net

MM5261-2607