INDIRECT ELECTRIC SAUCEPAN LT.50 WITH AUTOMATIC CONDENSATE DRAIN VALVE

Project: .....
Rev.: .....
Zone: .....
Location: .....

weinnovate cooking

CODICE	MODELLO	SERIE
CR1356079	D73/10PEI05S	DIAMANTE70

GENERAL CHARACTERISTICS

In addition to offering the widest choice of solutions and 2 mm thick and 70 cm deep tops, this series has all the power, robustness and functionality you need to work efficiently. Scotch Brite finish stainless steel outer shells and feet. Worktop height adjustable from 840 to 900 mm. Modularity of range: 200-400-600-800-1200 Wide range of accessories.

TECHNICAL SPECIFICATIONS

Possibility of hot or cold water loading

Stainless steel tank with aisi 316 bottom

Indirect pans with automatic condensate drain valve

Equipment certified for low voltage directive 2014/35/EU according to the international CB scheme.

Thanks to the jet-proofing certification obtained in specific tests, the knobs and under-knobs can be washed, without compromising functionality and safety.

Technical Information

SPECIFICATION	DATA
MATERIAL	CR1356079
DEFINITION	D73/10 PEI05 S PEN.ELE IND.M60 W/VAL 50L
COMMERCIAL LINE	DIAMANTE
SUPPLY	ELECTRICS
DIM. WIDTH	600 mm
DIM. PRODUCTIVITY	730 mm
DIM. HEIGHT	870 mm
NET WEIGHT	95,000 Kg
VOLUME (net)	0,381
PACKAGE LENGTH	660 mm
PACKAGE WIDTH	850,000 mm
PACKAGING HEIGHT	1240,000 mm
PACKAGE VOLUME	0,695 m3
GROSS PACKING WEIGHT	105,000 Kg
STANDARD POWER SUPPLY	380-415V 3N
FREQUENCY	50-60 Hz
ELECTRICAL POWER	9,800 kW
IP GRADE	IPX4
CERTIFIED MODEL	D73/10 PEI05

SCHEMA DI INSTALLAZIONE - INSTALLATION DIAGRAM - INSTALLATIONSPLAN - SCHÉMA D'INSTALLATION - ESQUEMA DE INSTALACION -INSTALLATIESCHEMA - IINSTALLATIONSRITNINGAR

MISURE IN cm - DIMENSIONS IN cm - ABMESSUNGEN IN cm
MESURES EN cm - MEDIDAS EN cm - MATEN IN cm

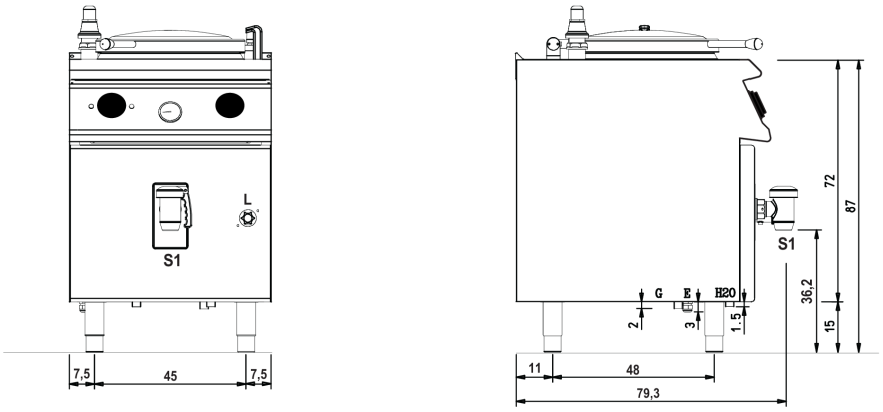

(D) 73/10 PEI05

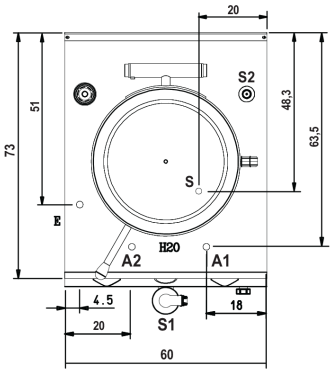

Legenda - Legende - Key - Légende - Leyenda - Legenda

H2O Attacchi arrivo acqua - Wasseranschluss - Water inlet - Arrivée eau - Union de agua - Wateraansluiting
A1 = Calda - Heiss - Warm - Chaude - Caliente - Warm
A2 = Fredda - Kalt - Cold - Froid - Fria - Koude
EN ISO 228-1 G 3/4

E Pressacavo entrata linea elettrica - Stopfbuchse - Electric cable stress relief
Presse étoupe de câble él. - Pisacable - Elektrische kabelwartel

S Scarico acqua intercapedine - Wasserablauf Zwischenraum - Jacket water drain
Evacuation eau double enveloppe - Descarga de agua intersticios - Afvoer water tussenruimte
EN ISO 10226-1 R 3/4

S1 Scarico acqua - Wasserablauf - Water outlet - Vidange de l'eau - Desaguadero - Wateraftapaansluiting
1 1/2"

Product's PLUS

Equipment certified for low voltage directive 2014/35/EU according to the international CB scheme.

Thanks to the jet-proofing certification (IPX5) obtained through specific tests, knobs and under-knobs can be washed, without compromising functionality and safety.

Possibility of hot or cold water loading

Stainless steel tank with aisi 316 bottom

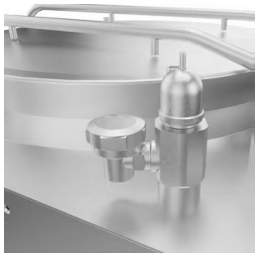

Indirect pans with automatic condensate drain valve

ACCESSORIES

CODE	MODELLO	DESCRIZIONE
MA97347000	9C5	
MA97348000	9CV5	
CR0599730	7C8	
CR0599740	7CV8	
MA97349000	9-I5	
CR0592789	ZF6	
CR0592830	ZG	
MA97432000	R	
MA97433000	RI	
CR0592869	PZM	
CR0593580	9PT	
CR0592879	KPA	
CR0599649	7ZL	