Manitowoc
FROM PENTAIR WATER SOLUTIONS

INDIGO® NXT

iP0620 Ice Cube Machine - 50 Hz

IRP0620A-251 | IRP0620W-251 | IDP0620A-251 | IDP0620W-251
IYP0620A-251 | IYP0620W-251 | IYP0620A-251T



Indigo NXT Series iP0620
Ice machine on D420C bin
Ice machine and bin sold separately.

Ice Machine Electric

230/50/1

Minimum Circuit Ampacity:
Air Cooled: 5.4
Water Cooled: 4.4

Maximum Fuse Size:
Air Cooled: 15 amps

Instant Power:
Air Cooled: 1242 W
Water Cooled: 1012 W

Specifications

BTU per hour:
8,935 (average)
10,915 (peak)

Refrigerant:
R290 CFS Free
Non-ozone depleting
and near zero GWP

Operating Limits:
- Ambient Temperature Range:
  35˚ to 110˚F (1.7˚ to 43.3˚C)
  Water Temperature Range:
  40˚ to 90˚F (4.4˚ to 32.2˚C)
- Potable Water Pressure:
  Min. 20 psi (137.9 kPA)
  Max. 80 psi (551.1 kPA)
- Condenser Water Pressure:
  Min. 20 psi (137.9 kPA)
  Max. 275 psi (1890 kPA)

Ice Shape



Half Dice:
3/8" x 1⅛" x 7/8"
(0.95 x 2.86 x 2.22 cm)
Cube weight: 5.7 g



Dice:
7/8" x 7/8" x 7/8"
(2.22 x 2.22 x 2.22 cm)
Cube weight: 8.5 g



Regular:
1⅛" x 1⅛" x 7/8"
(2.86 x 2.86 x 2.22 cm)
Cube weight: 14.2 g

Designed for operators who know that ice is critical to their business, the Manitowoc Indigo NXT Series Ice Machine provides reliable and consistent performance. Built-in preventative diagnostics and programmable operation help minimize downtime and optimize total cost of ownership.

Sanitation

- Easy Interior Cleaning - Hinged front door swings wide open, providing easy access to food zone. Removable water trough, distribution tube, curtain, water probe and water pump allow for complete, efficient cleaning of the parts. Select components are made with AlphaSan® antimicrobial.
- Low-Maintenance, Durable Exterior - 304 stainless steel provides corrosion resistance.
- Added Protection - Available LuminIce® Growth Inhibitor helps control the growth of bacteria and yeast within the food zone. Indicator on the display provides operational status.

Sustainability & Value

- R290 Natural Refrigerant - Minimize global warming potential and still maintain a high performance with R290 propane refrigerant.
- Ease of Operation - The easyTouch® display takes the guesswork out of owning and operating an ice machine with icon-based touch screen.
- Consistent Output - Acoustical ice sensing probe and Active Sense ensure consistent harvest, even in challenging water conditions and environments.
- Intelligent Diagnostics - Worry-free operation with 24-hour preventative maintenance and diagnostic feedback.
- Cost Savings - Reduce energy costs with programmable Ice production by scheduling during lower rate hours and controlling daily ice volume.
- Overall Lifetime Value - Lower cost of ownership over the life of machine with decreased energy and water consumption as compared to legacy models.

COMMERCIAL WARRANTY*
ICE MAKER 3 YEAR PARTS AND LABOR | EVAPORATOR 5 YEAR | COMPRESSOR 5 YEAR PARTS 3 YEAR LABOR

*This is a limited warranty. For full terms, visit manitowocice.com/service/warranty or call 920-682-0161

iP0620 Ice Cube Machine - 50 Hz

IRP0620A-251 | IRP0620W-251 | IDP0620A-251 | IDP0620W-251
IYP0620A-251 | IYP0620W-251 | IYP0620A-251T

iP0620 on D420C Storage Bin

Ⓐ Electrical Entrance (2) Options
Ⓑ 3/8" (0.95 cm) F.P.T. Water Condenser Inlet (water-cooled units)
Ⓒ 1/2" (1.27 cm) F.P.T. Water Condenser Outlet (water-cooled units)
Ⓓ 1/2" (1.27 cm) Auxiliary Base Drain Socket
Ⓔ 3/8" (0.95 cm) F.P.T. Ice Making Water Inlet
Ⓕ 1/2" (1.27 cm) F.P.T. Ice Making Water Drain
Ⓖ 3/4" (1.91 cm) Bin Drain

Installation Note
Minimum installation clearance:
Top/side: 12" (30.50 cm)
Back is 5" (12.7 cm)

Installation location must be indoors.

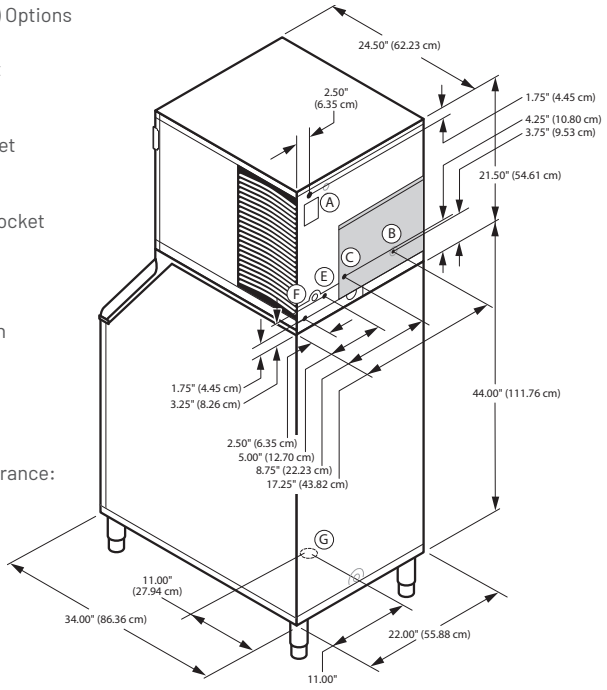

Space-Saving Design



	iP0620 D320C	iP0620 D420C
Height	59.50" 151.13 cm	71.5" 181.61 cm
Width	22.0" 55.88 cm	22.0" 55.88 cm
Depth	34.0" 86.36 cm	34.0" 86.36 cm
Bin Storage	264 lbs 120 kgs	383 lbs 174 kgs

Height includes adjustable bin legs 6.00" to 8.00", (15.24 to 20.32 cm) set at 6.00" (15.24 cm).
Bin capacity is based on 90% of the volume x 33 lbs/ft³ average density of ice.
Ice machine and bin sold separately.

Specifications

	Model	Ice Shape	Refrigerant Charge	Shipping Weight Kgs.	Ice Production 24 Hours		Power Usage kWh per 100 lbs (45.4 kgs) of Ice	Potable Water Usage per 100 lbs (45.4 kgs) of Ice
					70°Air/ 50°F Water (21°Air /10°C Water)	90°Air/ 70°F Water (32°Air / 21°C Water)	@ 90°Air / 70°F Water	(32°Air / 21°C Water)
Air Cooled	IRP0620A-251	Regular	230 g	59.5	453 lbs (205 kgs)	418 lbs (190 kgs)	5.08	13.65 Gal (51.67 L)
	IDP0620A-251	Dice	230 g	60.5	465 lbs (211 kgs)	446 lbs (203 kgs)	4.76	14.54 Gal (55.04 L)
	IYP0620A-251	Half Dice	230 g	60.5	538 lbs (244 kgs)	476 lbs (216 kgs)	4.63	14.88 Gal (56.33 L)
	IYP0620A-251T*	Half Dice	230 g	61.5	535 lbs (243 kgs)	485 lbs (220 kgs)	4.56	14.59 Gal (55.23 L)
Water Cooled	IRP0620W-251	Regular	260 g	58.5	480 lbs (218 kgs)	444 lbs (201 kgs)	4.45	14.60 (55.26L)
	IDP0620W-251	Dice	260 g	58	502 lbs (228 kgs)	467 lbs (212 kgs)	3.94	12.89 (48.79L)
	IYP0620W-251	Half Dice	260 g	59.5	476 lbs (216 kgs)	466 lbs (211 kgs)	3.83	14.51 (54.92L)
	Water cooled condenser water usage water per 100 lbs (45.4 kgs of ice: IRP0620 142.10 Gal (537.9 L), IDP0620 160.54Gal (607.71 L), IYP0620 160.54 Gal (607.71 L)							

Order separately: Ice storage bin for all units.
R290 is a refrigerant grade propane which is naturally occurring with no ozone depletion potential and extremely low global warming potential.
*Top air discharge factory installed.

Accessories

LuminIce® II Virus and Bacteria Inhibitor
controls viruses and bacteria in the ice machine.



External Scoop Holder
protect the ice scoop with the NSF approved versatile scoop holder.



Arctic Pure® Plus Water Filters
reduce sediments and chlorine contaminants down to 0.5 microns. Use with a pre-filter is recommended.



Manitowoc Ice reserves the right to make changes to the design or specifications without prior notice.

Manitowoc
FROM PENTAIR WATER SOLUTIONS
2110 South 26th Street | Manitowoc, WI 54220 | United States
+1.920.682.0161 | +1.920.683.7589 Fax | manitowocice.com

All indicated Pentair trademarks and logos are property of Pentair. Third party registered and unregistered trademarks and logos are the property of their respective owners.
©2025 Pentair. All Rights Reserved.