Oasis

Refrigerated Self-Service Case With Swing Doors

Structural Concepts®
DELIVERING FRESH. ALWAYS.™

- **BD3632** 36-1/4"L x 32-1/4"D x 82-5/8"H
- **BD4732** 47-1/4"L x 32-1/4"D x 82-5/8"H



BD3632

Included

- Breeze~E (Type-II) self-contained refrigeration
- Clear glass swinging doors (self-closing)
- Condensate pan
- Hydrocarbon refrigerant (R290)
- LED shelf lights
- One piece formed ABS plastic tub
- One year parts & labor; 5 year compressor warranty
- Shelving removable and adjustable on 1" centers
- Warmest average product temperature of 40°F or less

Specify	Standard Features	Additional Options
EXTERIOR COLOR	• Powder coated Silversan Black	• Stainless steel
INTERIOR COLOR	• Powder coated Silversan Black	• Stainless steel
BASE SUPPORT	• Casters w/ levelers	• Seismic levelers
END PANELS	• Full w/stainless steel mirror interior	
FRONT DOORS	[1] • Clear glass swinging doors (self-closing)	
PRICE TAG MOLDING	• 1" Price tag molding (matches interior color)	
SHELVING	• Metal shelves (4), lighted (LED)	
LIGHTS	• LED 4000K w/ frosted lens	
ELECTRICAL CONNECTION	• 6' Straight blade power cord (base exit)	• Electrical leads (remote)
CLEAN SWEEP	• None	• Clean Sweep® automatic condenser coil cleaner (2 year parts & labor warranty included)
REFRIGERATION	• Breeze~E (Type-II) self-contained refrigeration	[1] • Remote w/thermostat, solenoid & TXV
MISCELLANEOUS		• Second year parts & labor warranty (excludes compressor)

Std Notes: 1 - Doors per unit - BD3632 = 1, BD4732 = 2

Option Notes: 1 - Read important notes for remote options

Oasis

Refrigerated Self-Service Case With Swing Doors

Structural Concepts
DELIVERING FRESH. ALWAYS.™

Intended Environment:	Type II - Designed to operate in ambient conditions of 80°F and 55% relative humidity unless noted otherwise in system information below.	
Zone	**Intended Product To Be Displayed**	**Warmest Avg Prod Temp ° F**
1	Packaged refrigerated products-Prechilled to Warmest Avg Prod Temp.	40

PLAN VIEW

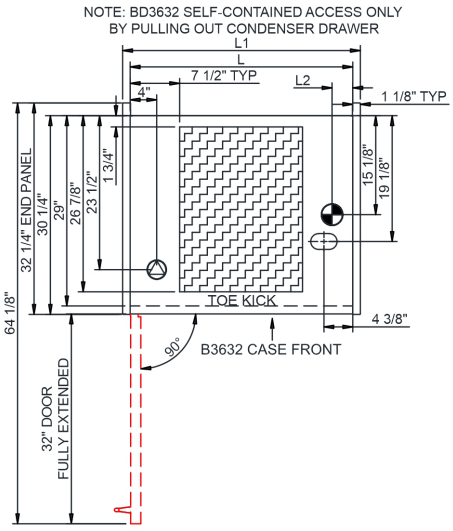

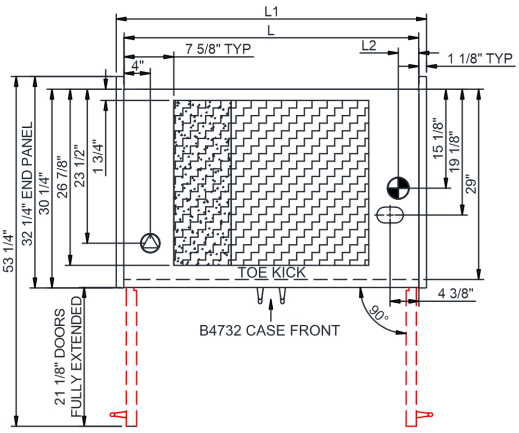

SIDE VIEW

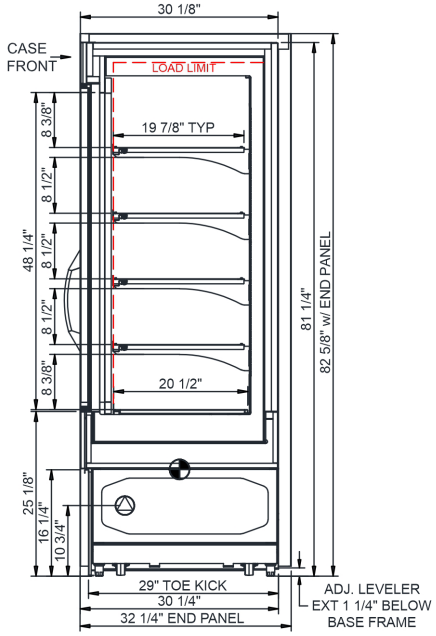

NOTE: COMPRESSOR AIR FRONT INTAKE AND UPPER REAR DISCHARGE. LOWER FRONT PANEL CANNOT BE BLOCKED.

NOTE: ALL DIMENSIONS APPROXIMATE

- ELECTRICAL JUNCTION BOX (SUPPLIED WITH 6" LEADS OR POWER CORD).
- LOCATION OF DRAIN TUBE FOR REMOTE REF. ONLY (SUPPLIED WITH ¾" OR 1½" PVC TUBE).
- REFRIGERATION LINE CONNECTION.
- REMOTE FLOOR SINK & UTILITIES ACCESS AREA.
- SELF-CONTAINED CASE SERVICE ACCESS AREA.
- DRY CASE SERVICE ACCESS AREA.

Model Technical Specifications

Model	L"	L1"	L2"	System Circuit Volts			Phs	Freq	Amps ***	Watts	Wires	NEMA Plug	SST	Conv. Rack BTUH	Para. Rack BTUH	Est Wt
BD3632	34.00	36.25	3.13	Remote (DX - A2L)	Circuit #1	110-120	1	60	1.79	49	2+G	Leads Multiple	28.00	730	676	660
				Self-Contained (R290)	Circuit #1	110-120	1	60	10.51	426	2+G	5-15P or L5-15P	N/A	N/A	N/A	
BD4732	45.00	47.25	3.13	Remote (DX - A2L)	Circuit #1	110-120	1	60	1.79	56	2+G	Leads Multiple	28.00	821	760	810
				Self-Contained (R290)	Circuit #1	110-120	1	60	11.07	468	2+G	5-15P or L5-15P	N/A	N/A	N/A	

*** Does not include electric defrost on freezer models.

Regulatory Approvals:	
All Models	Accordance with AHRI Std 1200 ETL Listed to UL 471 ETL Listed to CAN/CSA 22.2 No. 120 ETL Sanitation to NSF/ANSI 7

In Accordance with AHRI Std 1200

DOE 2017 Energy Efficiency Compliant

Important Notes:

1) REMOTE REFRIGERATION NOTE: Condensing unit not included, floor drain required.
2) ELECTRICAL NOTE: If GFCI is required, a GFCI breaker MUST be used in lieu of a GFCI receptacle
3) Performance issues (product temperatures, water on floor, etc.) caused by adverse conditions are not covered by warranty.
4) Keep unit at least 15' from exterior doors, overhead HVAC vents, or any air curtain disruption.
5) End panels must be tightly joined or kept at least 6" away from any structure to prevent condensation.
6) Do not expose unit to direct sunlight or any heat source (ovens, fryers, etc.).
7) Tile floors, low ceilings, or small rooms will increase noise level.

⚠ **WARNING:** This product can expose you to chemicals, including Urethane (Ethyl Carbamate), which are known to the State of California to cause cancer and birth defects or other reproductive harm. For more information go to www.P65Warnings.ca.gov.

Placement of Case

Consider where the display case will be positioned relative to walls, ceilings, HVAC vents, windows, and other equipment discharging warm air.

The 5′ - 10′ - 15′ Rule

Stay 5′ away from an exterior window

Direct sunlight increases the heat load on the front of the display resulting in the refrigeration system having to work harder and possible condensation on the case.

Remain 10′ away from HVAC ceiling vents

Air blowing on the front of the display interrupts the air curtain and causes product temperatures to increase.

Minimum 4″ clearance to walls & ceilings.
Refer to spec sheets & design guide for further information.

With service display cases that have a glass front, air blowing on the front glass causes condensation to develop.

Position the display 15′ away from exterior doors

Air drafts from the front exterior doors interrupt the air curtain, allowing warm air to penetrate the inside of the display, affecting product temperature.

