BK RESOURCES

888-310-4393 • 120 Frontage Road, Altamont, IL 62411 • www.bk-resources.com

Use your smart phone to scan the above QR code to visit our website: www.bk-resources.com

Service Faucet with Vacuum Breaker

Model: BKSF-WB1

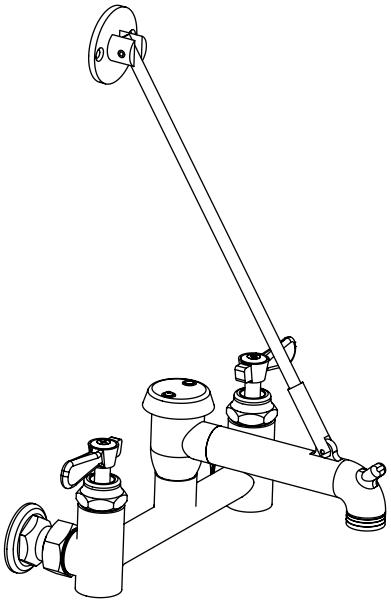

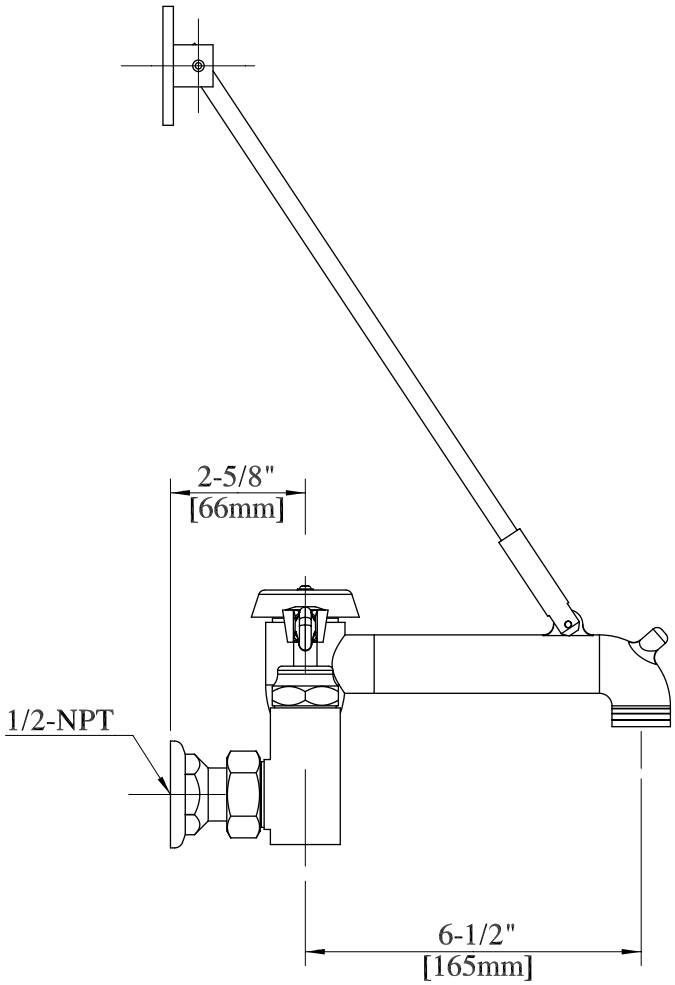

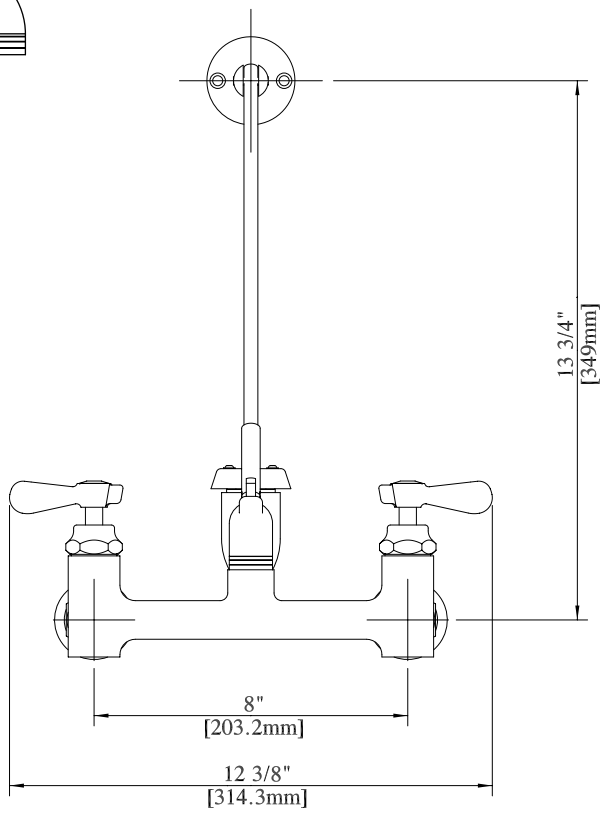

Product Specifications:

- Wall Bracket Included
- Integral Bucket Holder on Spout
- Garden Hose Threading on Spout
- Integral Check Valves
- 1/4 turn ceramic valves
- 1/2" NPS female inlets

Features:

- Integral Vacuum Breaker

PRODUCT SPECIFICATION SHEET

BK RESOURCES

BK RESOURCES

888-310-4393 • 120 Frontage Road, Altamont, IL 62411 • www.bk-resources.com

Service Faucet with Vacuum Breaker

Model: BKSF-WB1

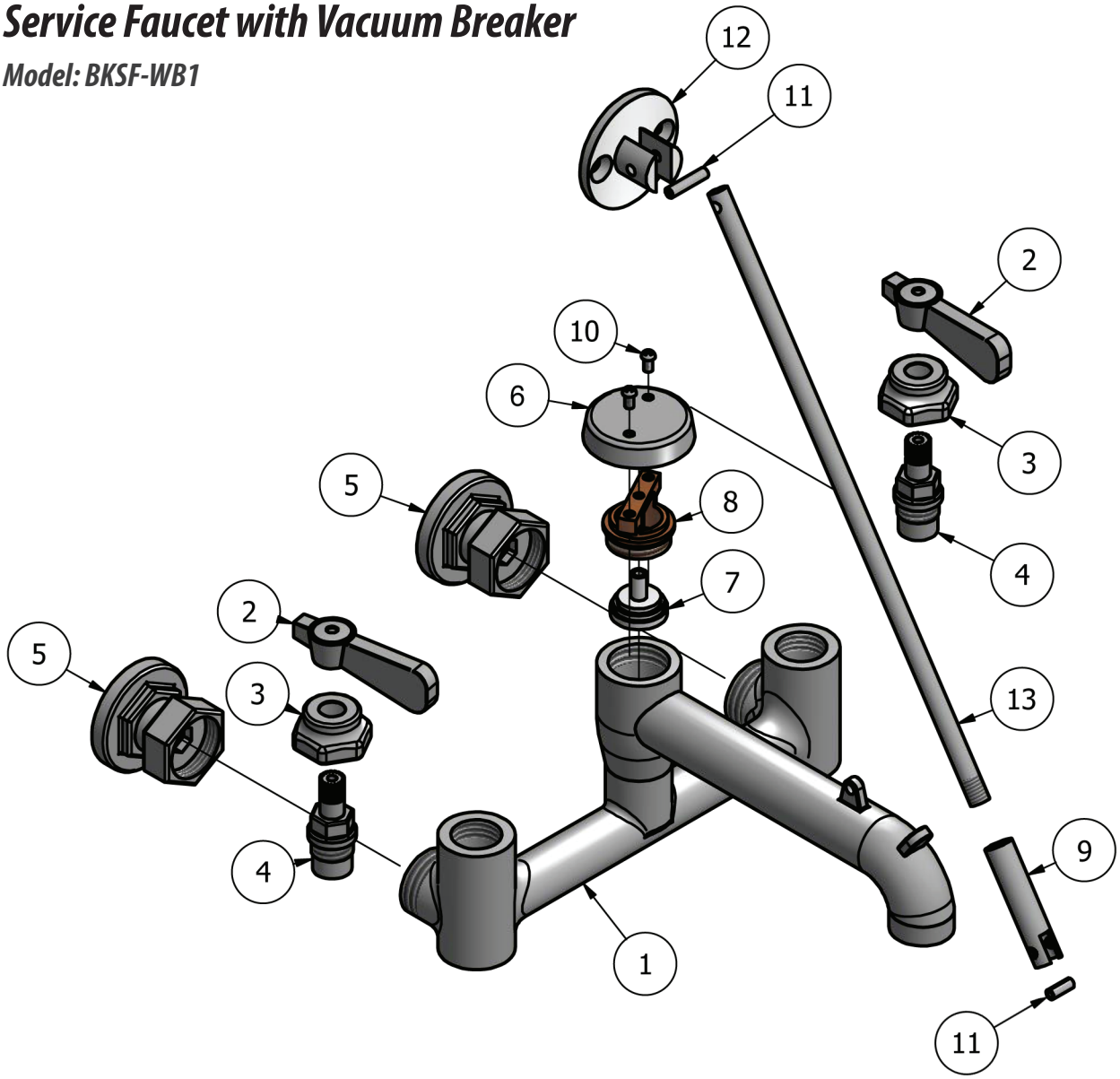

Exploded Parts Detail:

Diagram #	Quantity	Part Number	Description
1	1	BKSF-WB1	Faucet Body
2	2	BKF-SBH	Handle Assembly
3	1	BKF-Bonnet	Valve Bonnet
4	2	BKF-(HV/CV)-G	Valve
5	2	BKF-ESC	Escutcheon
6	1	BKSF-VBC	Vac Breaker Cap
7	1	BKSF-VBS	Vac Breaker Seal

Diagram #	Quantity	Part Number	Description
8	1	BKSF-VBS	Vac Breaker
9	1	BKSF-VS	Wall Support Sleeve
10	1	BKSF-WSS	Vac Cap Screw
11	2	BKSF-VCS	Pin
12	1	BKSF-WB	Wall Bracket
13	1	BKSF-WB-R	Wall Support Rod

PRODUCT SPECIFICATION SHEET

BK RESOURCES