VICTORY

PROJECT: _____

ITEM # _____ QTY: _____

MODEL # _____

AIA # _____ SIS # _____

VICTORY ELITE™ TOP MOUNT REFRIGERATOR

VERSA-3D-HD-HC

POWERED BY V-CORE

EXCLUSIVE WARRANTY

- **7 Year Parts, Labor and Compressor**
- **Exclusive 2 Year Warranty On Magnetic Door Gaskets**
- **Lifetime Warranty On Handles & Hinges (parts only)**



CABINET CONSTRUCTION

- Stainless Steel Front, Gray Coated Sides
- Aluminum Interior
- Snap-In, Magnetic Door Gasket(s)
- Heavy Duty Cam Lift Hinges
- Stay-Open Door Feature For Easy Product Loading
- Required Clearance Is 12" Top, 3" Rear And 0" Sides
- 6" Casters
- 8' Cord And Plug

FEATURES

- High Performance Refrigeration System With An Electronic Control
- Expansion Valve Technology
- Energy Efficient LED Lighting
- Variable Speed Compressor Technology
- 9 Heavy Duty Epoxy Coated Shelves

REFRIGERATION

- Refrigeration System Uses R-290 Refrigerant To Comply With All Environmental Concerns
- Hot Gas Condensate Evaporator
- Adaptive Defrost For Reduced Energy Consumption And More Consistent Product Temperatures
- Epoxy Coated Evaporator Coil, Located Out Of The Food Zone
- Refrigerator Capable Of Maintaining Product Temperature Between 36°F And 38°F

ENERGY STAR

Please Verify Qualifying Units By Visiting:
www.energystar.gov/cfs

OPTIONS & ACCESSORIES

- Stainless Steel Back
- Stainless Steel Exterior
- Stainless Steel Interior
- Stainless Steel Breaker Caps
- Tray Slides
- 3" Casters Or 6" Legs
  (no charge at time of order)
- Seismic/Flanged Legs
- Additional Shelves: Heavy Duty Epoxy Coated Chrome Plated Or Stainless Steel
- Remote Models* (6" legs only)
  (refrigerant must be specified at time of order, see note)

3779 Champion Blvd, Winston-Salem, NC 27105

ph: (888) 845-9800 | fax: (800) 253-5168

Sales@VictoryRefrigeration.com | VictoryRefrigeration.com

Rev. 6/3/25 Printed in U.S.A.

APPROVAL: _____ DATE: _____

VICTORY ELITE™ TOP MOUNT REFRIGERATOR

VICTORY ELITE™ TOP MOUNT REFRIGERATOR

VERSA-3D-HD-HC

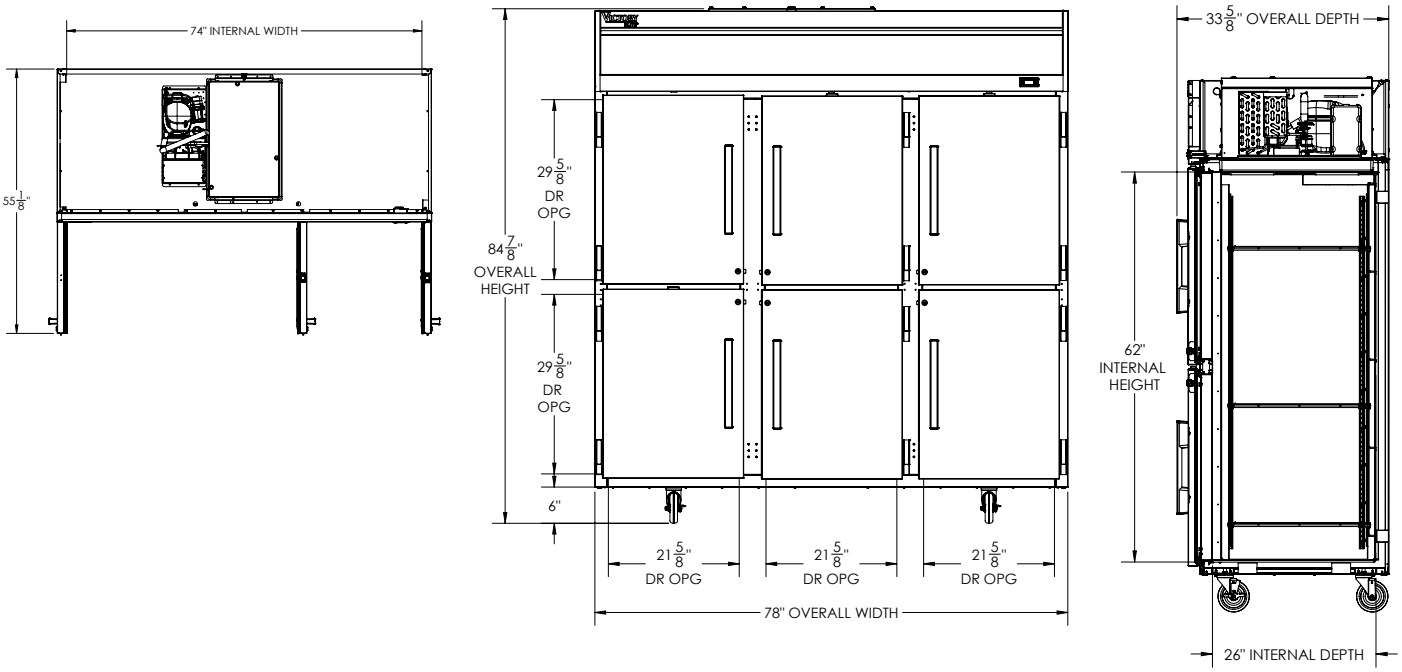

We reserve the right to change specifications and product design without notice. Such revisions do not entitle the buyer to corresponding changes, improvements, additions or replacements for previously purchased equipment. Dimensional tolerances +/- 1⁄4". Metric dimensions (MM)

12" Top clearance is required

CHARACTERISTICS		ELECTRICAL DATA		SHIPPING DETAILS	
Net Capacity (cubic ft.)	71.52	Cabinet Voltage**	115/60/1	Height	88"
Width, Overall (in.)	78"	Total Amperes	6.0	Width	80"
Depth, Overall (with handles)	33 5/8"	NEMA Plug (8' cord)	5-15P	Depth	36"
Height Overall (6" casters)	84 7/8"	**REFRIGERATION DATA**		Crated Weight	702 lbs
Depth, Door Open 90°	55 1/8"	Condensing Unit Size, HP	1/3	*NOTE: Remote units are field wired and comes with 6" legs. Refrigerant must be specified at time of order.	
Door Openings (in.)	21 5/8" x 29 5/8"	Refrigerant	R290		
No. Of Doors/Shelves	6/9	Capacity (BTU/HR) (100°F/20°F)	2800		
		Heat Rejection (BTU/HR)	4200		
		Charge (lbs/grams/ounces)	0.3307 / 150 / 5.3		

** NOTE: This unit utilizes variable speed compressor technology. The compressor can experience nuisance tripping on Class A GFCI outlets which have a trip limit of 4 mA to 6 mA. To avoid this issue in a location that requires GFCI circuit protection, Victory recommends using either an Eaton, SGF20, or HUBBELL Model Number GFRST83W 20A Heavy Duty Hospital Grade Self-Test GFCI Receptacle.

3779 Champion Blvd, Winston-Salem, NC 27105 | ph: (888) 845-9800 | fax: (800) 253-5168

Sales@VictoryRefrigeration.com | VictoryRefrigeration.com

Rev. 6/3/25 Printed in U.S.A.

WELBILT
an Ali Group Company