Expanding Stem Stainless Steel Casters

1-1/4" Stem Work Table Caster with Polyolefin Wheel

Certifications:

NSF

Features:

- Fits Standard 1-1/4" Tubing by Expanding the Stem Creating a Secure Fit
- Stainless Steel
- Double Ball Bearing Raceway for Long Wear and Added Strength
- With or Without Top Lock Brake
- Raceway Dust Cover

Material:

- Temperature Range -45° to 180°F
- Resistant to Chemicals and Solvents
- Nylon Bearing Sleeve
- Polyolefin Wheel

TLB version
(Top Lock Brake)

5SS-2RA-LDP

Part Number	Brake	Exposed Height	Wheel Size	Capacity
5SS-2RA-LDP	-	6"	5"	300 LBS
5SS-2RA-LDP-TLB	TLB	6"	5"	300 LBS

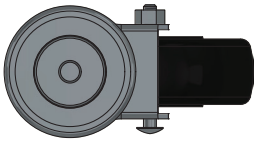

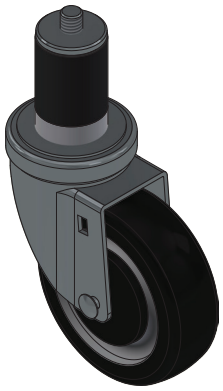

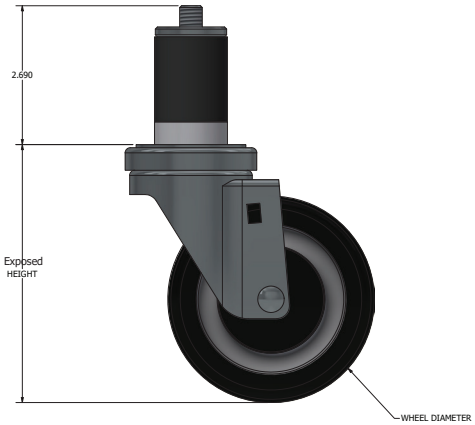

© BK Resources August 2026

Phone: 888-310-4393 | Fax: 888-310-4394 | Website: www.bk-resources.com | Email: sales@bk-resources.com

PRODUCT DATA SHEET

BK RESOURCES