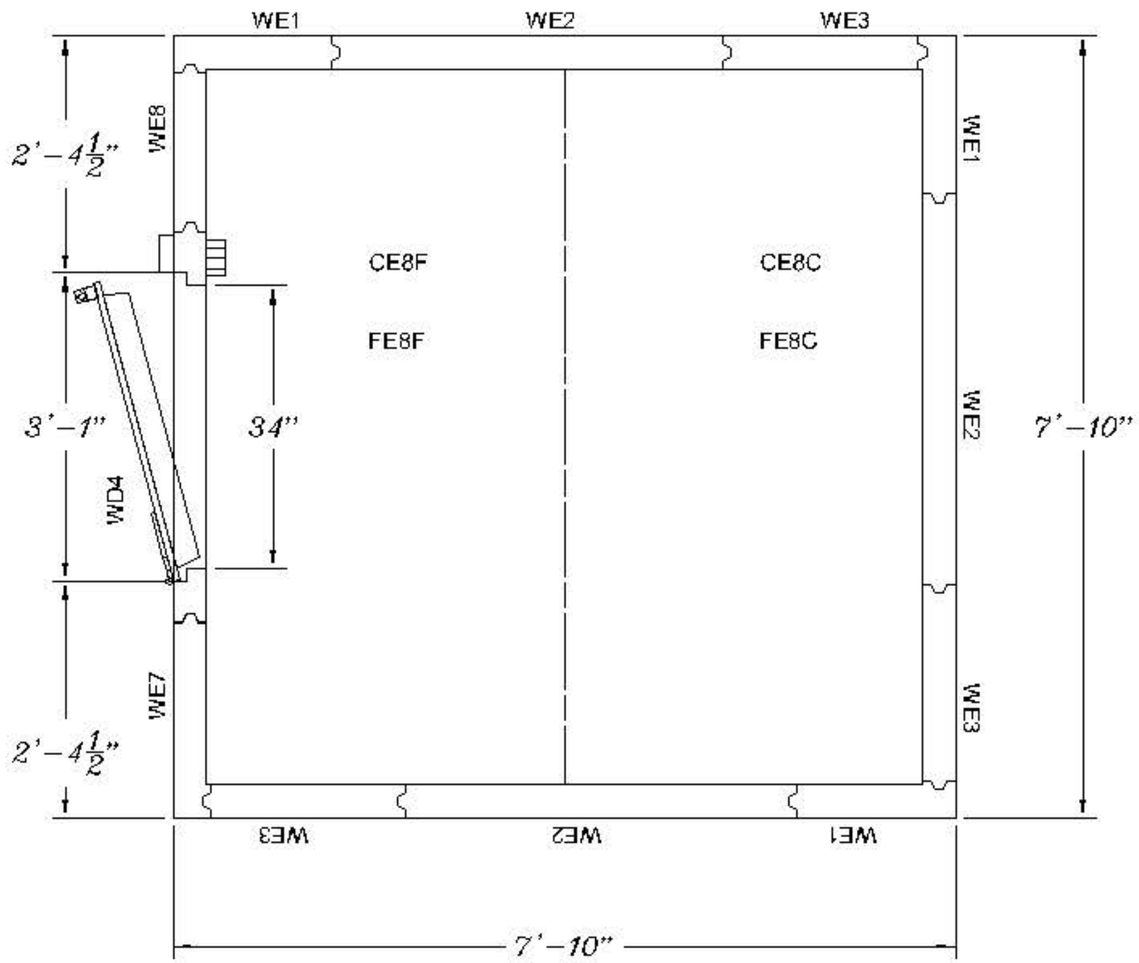

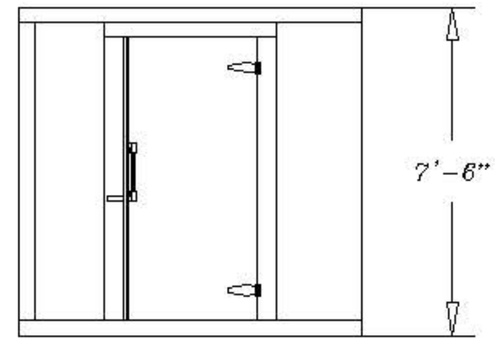

QUOTE DRAWING
Sign below for acceptance
X_____
Door hinge: Left___Right___
Door location wall (centered): Left___Front___

By signing here, you agree to our terms and conditions as outlined on www.uscooler.com/terms. Panel configuration subject to U.S. Cooler final approval. A facsimile or emailed approval of this drawing (CO88FL.PA110) shall have the same force and effect as a signed original and shall, upon receipt by U.S. Cooler, be binding on both parties.

Materials:
ExtMetal:Galvalume
IntMetal:Galvalume
Foam:Extruded 4in.

Legend
Ceiling — — — — —
Floor — — — —

Cooler: 7'-10" x 7'-10" x 7'-6"
Scale: 1/2"= 1'

FASTCOOLER
by U.S. Cooler
401 DELAWARE ST. * QUINCY, IL 62301
TEL 217 223 2421 * 800 521 2665 * FAX 217 223 2424

CUSTOMER	
JOB#	P.O.# Job Ref.
DATE 06/06/2023	DRAWN C.G. 2.0
DWG. REF CO88FL.PA110	APV.

To aid in packing, please indicate with an X the corner where installation will be starting.

Refrigeration Specifications

Qty	Manufacturer	Model	HP	Electrical	MCA	CmpRLA	CmpLRA	Dimensions DxWxH
Pre-assembled Remote Med Temp R448A Air Cooled Outdoor Condensing Unit								
1	Russell	RHT080E4SDA	0.75	208-230/1Phase60Hz	15	6.1	33.7	28.25"x27.875"x18.75"
1	Russell	RL6A052ADARE		115/1Phase60Hz	0.8			15.5"x27.125"x18.125"