3 COMP DROPIN SINK WITH 5" RISER W/4" O.C. HOLES

Stainless Steel 5" Riser Drop-In Sinks



Use your smart phone to scan the above QR code to visit our website: www.bk-resources.com

Features:

- Traditional Top mount
- Deep Drawn Construction for seamless and appealing design
- Can Fit on CST Cabinet

Material:

- T-304 18 ga. Stainless Steel

Part Number	Unit Size (l x w x h)	Faucet Included
DDI3-R5-1014	36" x 24" x 15 1/4"	N/A
DDI3-R5-1014-PG	36" x 24" x 15 1/4"	BKF-W2-12-G

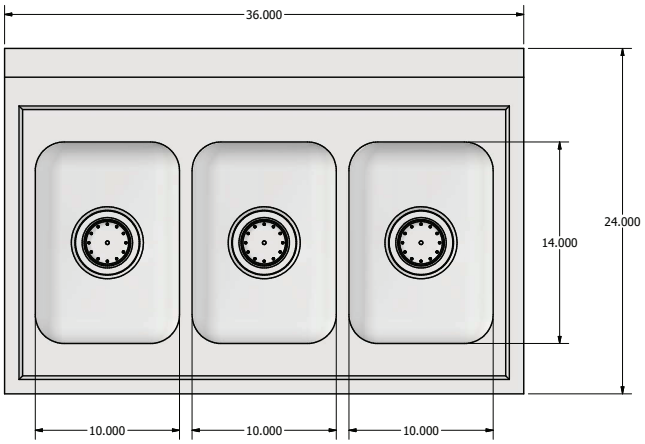

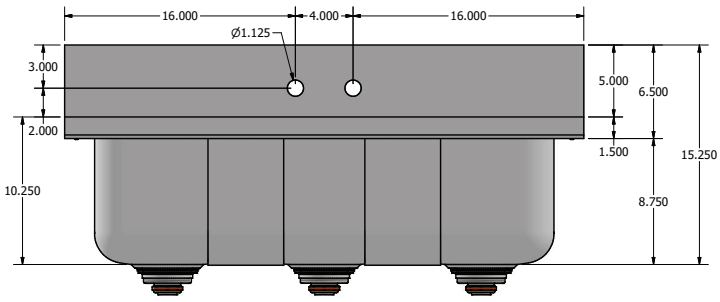

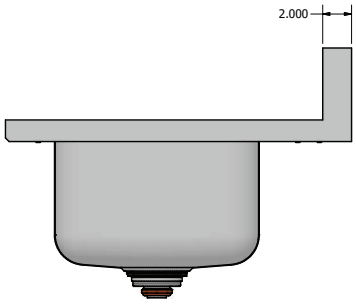

PRODUCT DATA SHEET

BK RESOURCES

© BK Resources August 2026