Refrigeration X We Build Trust, Sell Satisfaction 4184 E. Conant St., Long Beach, CA 90808 www.RefrigerationX.com	Project: Model #: Item #: Available W/H: Qty: Approval: AIA #: SIS #: CSI Section 11400

Solid Door Refrigerator

Reach-In Bottom Mount
X-line

Model : XBR72-3-N

FEATURES & BENEFITS

- ***Digital temperature control & monitor system***
  - Keeps food products safe by maintaining constant temperatures
  - Alarms that sound when doors are not sealed shut; protect against food spoilage that originates from cold air leaks
  - Early warning alarm program detects issues before malfunction occurs
  - Digital display allows for easy monitoring
  - Programs interpret the condition of refrigeration systems by self-diagnosis
  - Automatic evaporator fan motor delays
- ***Hydrocarbon refrigerants (R-290)***
  With innovative and eco-friendly technology, RefrigerationX brings you hydrocarbon refrigerators designed to meet DOE's Energy Conservation Standards in 2017 and to use EPA's SNAP Program approved HC refrigerants. Hydrocarbon refrigerants do not deplete the ozone layer and have very low contribution to global warming (ODP-0, GWP-3).
- ***Hot gas condensate system***
  Through RefrigerationX's creative innovation, the condensate system surfaces have been specially treated to resist corrosion. This not only increases efficiency without the risk of refrigerant leakage from corrosion, but also prevents the overflow of condensate water.
- ***Cabinet construction***
  X-line series model boasts a stainless steel exterior (door) with AL exterior sides (galvanized steel top, bottom, and back). Interior has a stainless steel bottom with AL interior (walls, door liners, and top duct).
- ***High-density polyurethane insulation***
  The entire cabinet structure and solid doors are foamed-in-place using high density, CFC free polyurethane insulation.
- ***LED interior lighting***
- ***Adjustable, heavy duty, PE (polyethylene) coated wire shelves***
- ***Self-contained system***
- ***4" dia. swivel casters with locks on the front set***
- ***Door locks***
- ***Solid and sturdy grille design***
- ***Bottom mount compressor***
- ***Anti-corrosion coated evaporator standard feature***
- ***Refrigerator holds 33°F ~ 38°F for the best in food preservation***

NATURAL Refrigerant

Model	Swing Doors	CU./FT.	#of Shelves	HP	AMPS	Crated Weight (lbs.)	L x D x H† (inches)
XBR72-3-N	3	65.8	9	1/2	5.6	599	77 3/4 x 30 3/4 x 78

Ver.20250916 Printed in U.S.A.

† Height does not include 4-3/4" for caster height.

Solid Door Refrigerator

Reach-In Bottom Mount
X-line

Model : XBR72-3-N

ELECTRICAL DATA	
Voltage	115/60/1
Plug Type	NEMA 5-15P
Full Load Amperes	5.6
Compressor HP	1/2
Cord Length (ft.)	9
Refrigerant	R-290
DIMENSIONAL DATA	
# of Doors	3
Net Capacity (cu. ft.)	65.8
Ext. Length Overall (in.)	77 3/4 (1975mm)
Ext. Depth Overall (in.)	30 3/4 (780mm)
Ext. Height Overall (in.)†	78 (1982mm)
Int. Length Overall (in.)	73 7/8 (1875mm)
Int. Depth Overall (in.)	26 5/8 (675mm)
Int. Height Overall (in.)	54 1/8 (1374mm)
# of Shelves	9
Shelf Size (L x D) (in.)	23 x 23 1/2 (L/R), 25 3/8 x 23 1/2 (M)
Net Weight (lbs.)	505
Gross Weight (lbs.)	599

Design and specifications subject to change without notice.
Actual shipping weight may differ due to extra packing materials for product protection.
† Height does not include 4-3/4" for caster height.

PLAN VIEW

(unit : inch)

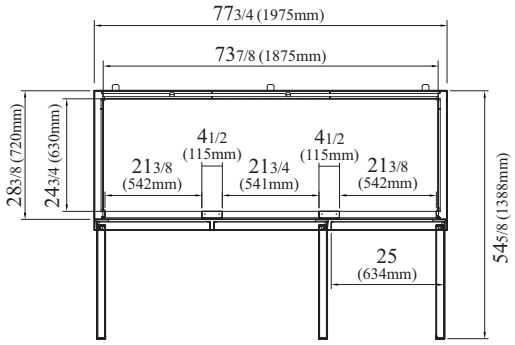

TOP VIEW

■ WARRANTY : 2 Year Parts and Labor Warranty
Additional 3 Year Warranty on Compressor

■ OPTIONAL ACCESSORIES

- 5" caster, ½" diameter & 13 TPI: M726500100 (non-brake), M726500200 (w/ brake)
- 6" stainless steel leg: 30221M0600
- Additional PE coated wire shelf: G8F1800101 (L/R), G8F1800201 (M)
- Half door bun tray rack: RX-TSP-2224-T (each holds up to six 18"L x 26"D sheet pans)
- Full door bun tray rack: RX-TSP-2250-T (each holds up to fifteen 18"L x 26"D sheet pans)

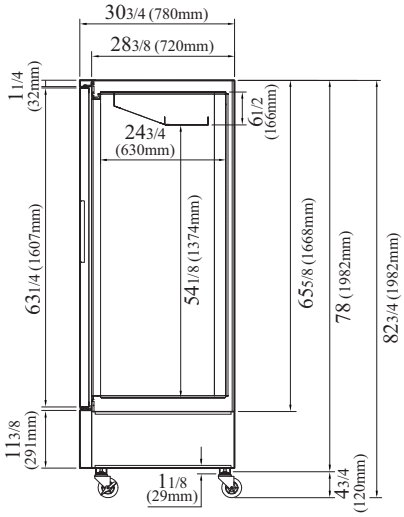

SIDE VIEW

Ver.20250916

NATURAL Refrigerant

Warranty: 800-381-7770
Warranty@RefrigerationX.com

Continued product development may necessitate specification changes without notice.