# Steam Tables

## Electric Sealed Well Steam Table



*Use your smart phone to scan the above QR code to visit our website: www.bk-resources.com*

### Features:

- 2, 3, 4, or 5 Pan Sealed Well Design which accomodates full size food pans (No water pans needed)
- For wet heating only
- Cutting Board Shelf w/Removable poly cutting board
- Undershelf to store water pans, lids and utensils when not in use
- Infinite Temperate Control w/Independently Controlled wells w/Indicator Lights
- 750W per Well, (500W Per Well for ST-SW-2)
- Individual 1/2" NPT Drains

### Material:

- 20 Ga. Stainless Steel
- Die Stamped Openings

### Warranty:

- 1 Year Parts Only

### Options:

- Optional 5SBR-4ST-LDP-TLB Casters can be added at an additonal cost
- Sneeze Guards, Overshelves, and extra parts can be added at an additional cost.

| Model | Wells | Unit Size (L x W x H) | Voltage | Wattage | Amps | Plug | Product Weight (lbs) |
|---|---|---|---|---|---|---|---|
| ST-SW-2 | 2 | 30.3" x 29.5" x 33.25" | 120 | 1000 | 8.3 | NEMA 5-15 | 81.00 |
| ST-SW-3 | 3 | 44.3" x 29.5" x 33.25" | 240 | 2250 | 9.4 | NEMA 6-20 | 109.00 |
| ST-SW-4 | 4 | 58.3" x 29.5" x 33.25" | 240 | 3000 | 12.5 | NEMA 6-30 | 135.00 |
| ST-SW-5 | 5 | 72.3" x 29.5" x 33.25" | 240 | 3750 | 15.6 | NEMA 6-30 | 160.00 |

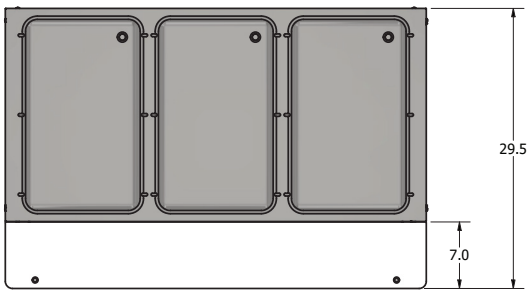


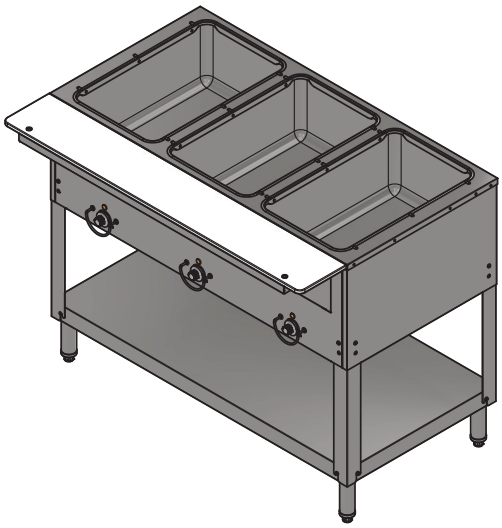

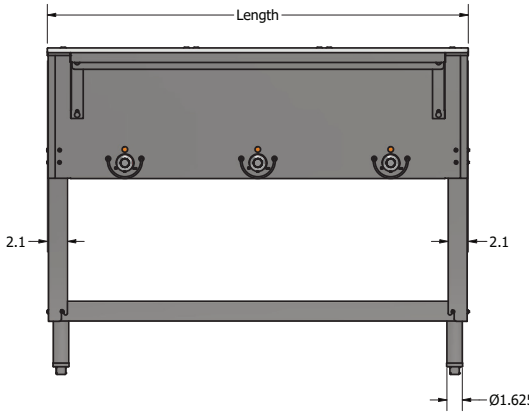


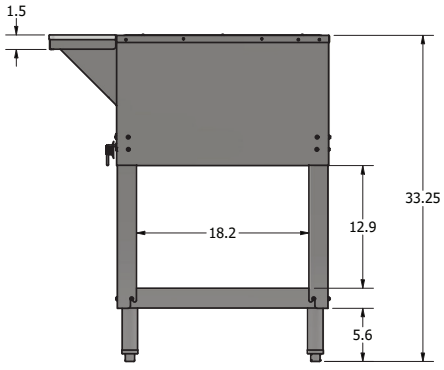


PRODUCT DATA SHEET

BK RESOURCES