Viking 100S Combi Jacketed Kettle

Model – Viking Combi 100S (4215967C)

FEATURES

- Viking kettle with mixer
- Steam heated version
- 316 Stainless steel mixing bowl
- Electromechanical controls
- Safety grid lid
- Step-less temperature control
- Multi-function mixing tool
- 2 mixing programs
- Electric tilting
- Measuring stick
- Water faucet (cold water)
- Hand shower (option)
- Strainer plate (option)

Please refer to Metos website for options and accessories

TECHNICAL DATA

Net Volume	100L
Spare Volume	10.5 L
Gross Volume	110.5 L
Dimensions	
Width	1154mm
Height	1039mm
Depth	792mm
Connections	
Water	Cold ø15mm Hot ø10mm

Electrical	Power 1,0 kW Voltage 230V, 1P+N+E 50/60Hz AMP 16A
Total Heat Load	16kW Latent 0.8kW, Sensible 3.4 kW
Waste	By kitchen contractor
Net Weight	185 kg
Steam Cons	30kg/hr

NOTE - Mandatory installation kit required for all installations, options are:

Single kettle surface – 4215837
Single kettle subsurface – 4215838
Group kettle surface – 4215845
Group kettle subsurface - 4215846

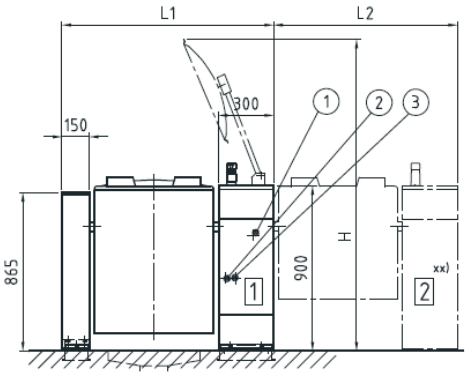

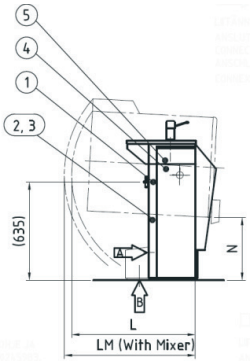

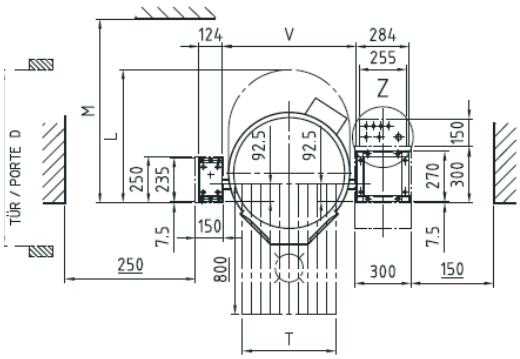

(1) Electrical connection
(2) Cold water connection
(3) Hot water connection
(4) Data cable (HACCP option)
(5) Control cables to building for heating control of kettle
(6) Steam inlet connection
(7) Steam condensate outlet

Model	L1 mm	L2 mm	M mm	L mm	LM mm	H mm	T mm	D mm	N mm	V mm
100S	1154	1004	1080	710	850	1800	500	785	405	720

Finland
metos.com/manufacturing

Metos Oy Ab
Ahjonkaarre
FI 04220 Kerava
Finland
Telephone +358 204 3913
international.sales@metos.com

Disclaimer: All unit capacities are based on subjective testing.
In line with policy to continually develop and improve its products, Metos Oy Ab reserves the right to change specifications and design without notice.

© Copyright Metos Oy Ab